Quick Overview of Prices
2024/2025

- Fireplaces
- Urfeuer- open fireplace
- Tiled stoves
- Masonry heaters
- KSO
- BSO
- BSK
- BSG
- Boiler
- Iron Dog
- Grilling and baking
- MAS/MSS/GNF
- USA/EOS/EAS

BRUNNER®
made in germany.

Price validity from 01.07.2024 to 30.06.2025.

All prices mentioned in this pricelist are in Euro.

Recommended retail prices excl. value-added tax.

This Quick Overview of Prices is an abstract of our main Pricelist 2024/2025.

It shows the most popular product combinations.
Of course, all products can be set up individually depending on your needs (refer to our main Pricelist 2024/2025).

This pricelist is not intended for the end customer.
Eventual typesetting errors or interim modifications of any kind are not considered to be reasons for a claim.
All contracts, deliveries and other services are subject to our “General terms and conditions of business”.

Subject to technical changes; errors excepted.

Content

	Page
Fireplaces	5
Urfeuer- open fireplace	96
Tiled stoves	112
Masonry heaters	168
KSO	188
BSO	194
BSK	218
BSG	258
Boiler	272
Iron Dog	332
Grilling and baking	338
MAS, MSS, GNF	342
USA, EOS, EAS	386

BRUNNER®

Abreviation - explication

DT	side-opening door
ST	lifting door
KT	tilting door
F	flat glass
R	round glass
DV	double glazing
EV	single glazing
Details for the corner fireplaces	
STR	lifting door right corner
STL	lifting door left corner
1T	one piece glass pane
2T	two-piece glass pane
Indications for inserts with additional door DHT	
DHTR	additional charging door, right side
DHTL	additional charging door, left side
DHTM	additional charging door, middle
Attention: the position of the DHT is always viewed from the glass pane side of the unit	
Indications for Tunnel inserts	
DT-DT	side opening door-side opening door (on both sides side opening)
DT-ST	side opening-lifting door (one side to open-one side to lift)
ST-KT	lifting-tilting door (one side to lift the other side to tilt)
ST-ST	lifting - lifting door (on both sides to lift)
Door hinge HKD 4.1/5.1/6.1 and front set B7/B8	
SSL	self closing left-hand stop
SSR	self closing right-hand stop
NSSL	non self closing left-hand stop
NSSR	not self-closing right-hand stop
GK	ceramic glass
GKB	ceramic glass coated
GKG	ceramic glass tinted
FR	Chamotte inner lining set
FR/Guss	Combustion chamber inner lining cast iron

BRUNNER®

Glazing formats series 5.0

Flat glazing

from page 12

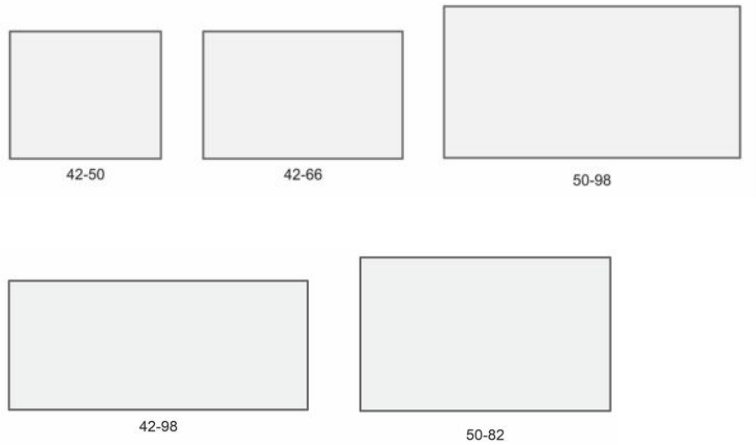

Door dimensions height x width in cm

Tunnel formats

from page 34

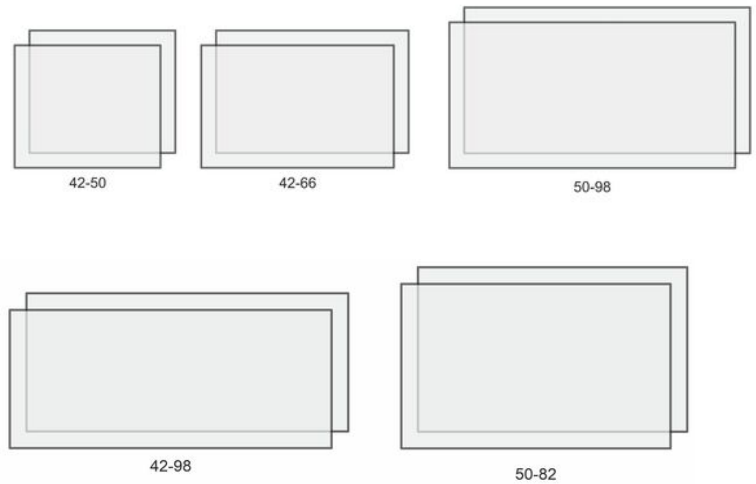

Door dimensions height x width in cm

Eck corners

from page 54

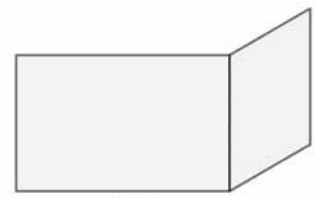

42-66-42

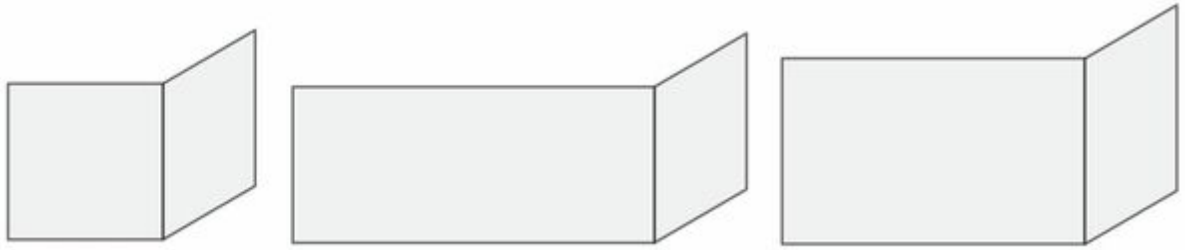

42-42-42 42-98-42 50-82-42

Door dimensions height x width x width in cm

Door frame - mounting frame series 5.0

lifting door

with mounting frame

with door frame

side-opening door

with mounting bracket

with door frame

Smoke hood variants series 5.0

Cast iron dome

Cast iron dome with heat exchanger rings

Cast iron dome low

Modular Accumulator MAS

Equipment EAS series 5.0

Preassembled EAS components, door switch, thermocouple, air connection box D=125 with motor transmission

Glazing formats Series 4.1

Flat glazing

from page 12

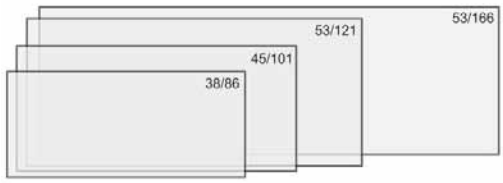

Architektur-Kamin

Stil-Kamin

Door dimensions height x width in cm

Tunnel formats

from page 34

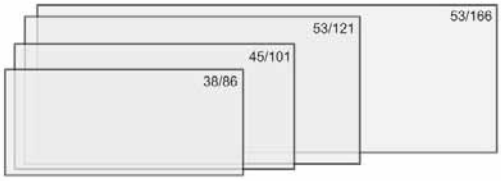

Architektur-Kamin

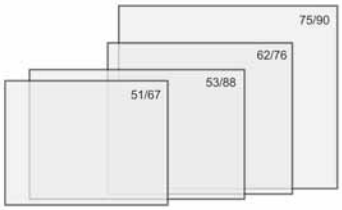

Stil-Kamin

Door dimensions height x width in cm

Eck corners

from page 54

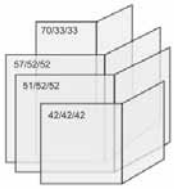

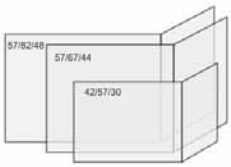

Eck-Kamin

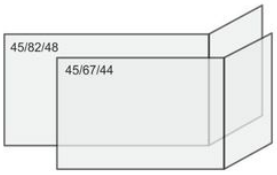

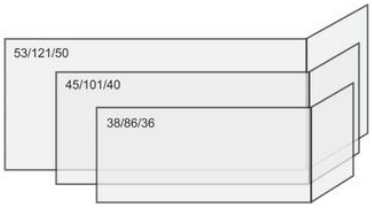

Architektur-Eck- fireplace

Door dimensions height x width x width in cm

Panorama formats

from page 80

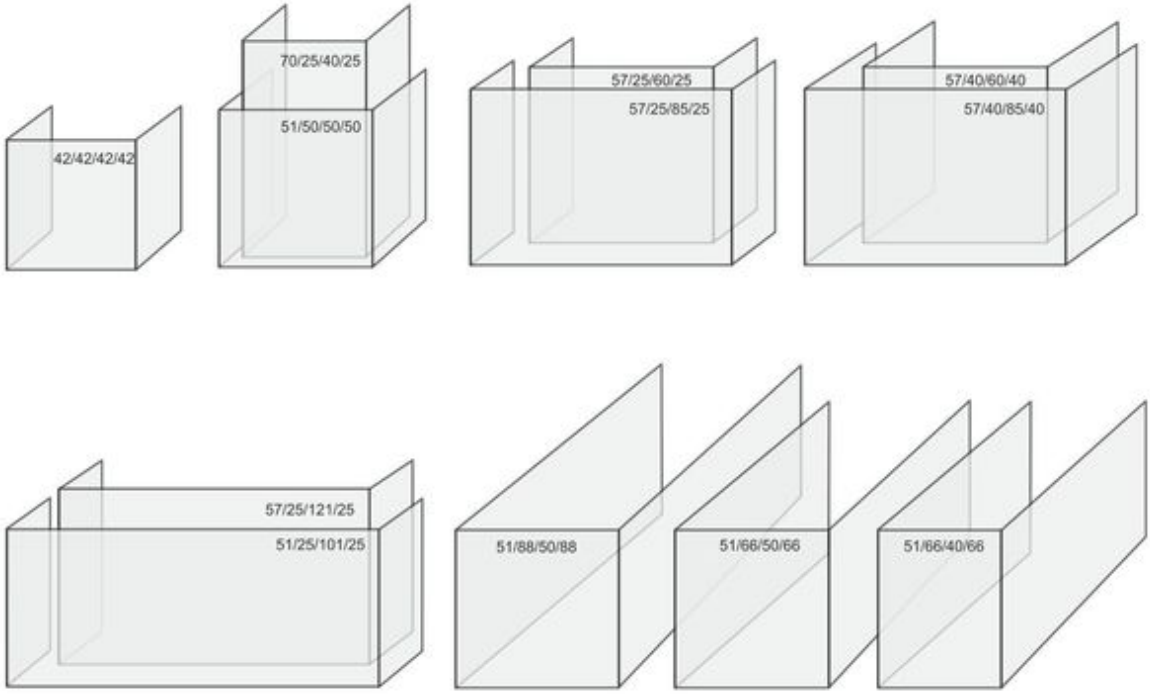

Door dimensions height x side width x front width x side width in cm

Door frame - mounting frame Series 4.1

Door frame

Mounting frame 50 mm

Mounting frame 70 mm

Panorama narrow frame

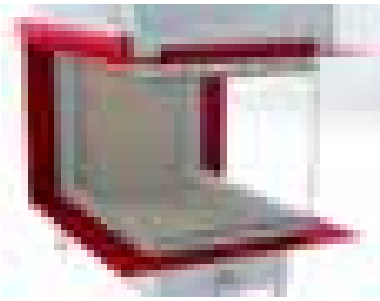
Panorama wide frame (Fire table)

Smoke hood variants Series 4.1

Cast iron hot air hood ⌀ 200 mm

Cast iron dome

Modular Accumulator MAS

Supplementary equipment

EAS Combustion controls with potential-free relay (without additional functions) consisting of display, 1 x flush-mount box, door switch, thermocouple & bus line, each 2 m long. Preassembled EAS/EOS components, door switch, thermocouple, motor box with transmission and ø 125 mm air flap, flexible hose with adjustable clamps

EOS Combustion control with graphic touchscreen display and additional functions (differential temperature control, Moritz's flap control) consisting of: Display with control unit, 2 x flush-mount box, door switch, thermocouple, bus and connecting line, each 2 m long, 4 x water sensors with immersion sleeve and 2x extension cable 3 m. Preassembled EOS components: door switch, thermocouple, motor box with transmission and ø 125 mm air flap, flexible hose with adjustable clamps

BKH 5.0 flat 42-50 DT

Set consists of:	Art.-Nr.	No.	Price
BKH 5.0 flat 42-50 DT GK FR,		1	
Mounting bracket / door frame		1	
Combustion chamber inner lining cast iron (FR/ Guss)		1	

Additional options (for all smoke hood variants)			
EAS (see page7)			2199,00
Reduced price for EAS without display			-214,50
Glass ceramic coated (GKB)			137,00
Combustion chamber inner lining cast iron (FR/ Guss)			652,50
Catalyst module BKH 5.0	HK000210		1263,00
Supply air connection box ⌀ 125 mm included at EAS version	HK000135		145,00
Supply air connection box ⌀ 150 mm	HK000136		159,50
Heat protection panel backside	HK004450		217,50
Heat protection panel backside with one side wall	HK004450-01		356,00
Heat protection panel for one side with two side walls	HK004450-02		513,50

Smoke hood variants:

+ **Cast iron hood ⌀ 200 mm**		10087	1	
Front variants:				
Mounting bracket		SET213148		**3697,50**
Door frame, black		SET213149		**3900,50**
Aditional option for cast iron dome				
+ Cast iron dome MAS ⌀ 180		D004186		0,00

Cast iron dome ⌀ 200 mm with cast iron heat exchanger rings		R015006-02	1	
Front variants:				
Mounting bracket		SET213150		**4380,50**
Door frame, black		SET213151		**4583,50**
Alternative article: connection piece eccentric instead of cast iron dome				
Connection piece eccentric ⌀ 200 mm		S003025		-206,00
Connection piece eccentric ⌀ 180 mm		S003024		-206,00
Additional options				
90° bend - dumper flap and cleaning ⌀ 200 mm		S002208		**329,00**
90° bend - dumper flap and cleaning ⌀ 180 mm		S002198		**306,00**

+ **Cast iron dome ⌀ 180 mm low**		D016042	1	
Front variants:				
Mounting bracket		SET213152		**4061,50**
Door frame, black		SET213153		**4264,50**

+ **Modular accumulator MAS 440 double-layered**		R009042	5	
Cast iron dome MAS ⌀ 180		R009095-01	1	
Mounting ring		10077	1	
Front variants:				
Mounting bracket		SET213154		**5718,00**
Door frame, black		SET213155		**5921,00**
Additional option MAS				
Exchange connectiong piece⌀ 200 mm		R009105		84,00
Exchange connectiong piece⌀ 160 mm		07137		84,00

+ **Boiler module**		W027070	1	
Front variants:				
Mounting bracket		SET213345		**6051,00**
Door frame, black		SET213346		**6254,00**
Additional option boiler module				
Conversion kit for top outlet		W027082		206,00

Energy efficiency index A +

BKH 5.0 flat 42-50 ST

Set consists of:	Art.-Nr.	No.	Price
BKH 5.0 flat 42-50 ST GK FR,		1	
Mounting frame 60 mm / door frame		1	
Chamotte inner lining set (FR)		1	

Additional options (for all smoke hood variants)			
EAS (see page7)			2199,00
Reduced price for EAS without display			-214,50
Glass ceramic coated (GKB)			137,00
Combustion chamber inner lining cast iron (FR/ Guss)			652,50
Catalyst module BKH 5.0	HK000210		1263,00
Supply air connection box ⌀ 125 mm included at EAS version	HK000135		145,00
Supply air connection box ⌀ 150 mm	HK000136		159,50
Heat protection panel backside	HK004450		217,50
Heat protection panel backside with one side wall	HK004450-01		356,00
Heat protection panel backside with two side walls	HK004450-02		513,50

Smoke hood variants:

+ **Cast iron hood ⌀ 200 mm**		10087	1	
Front variants:				
Door frame, black		SET213156		**5935,50**
Mounting frame, black 60 mm		SET213157		**5967,00**
Aditional option for cast iron dome				
Cast iron dome ⌀ 180 mm		D004186		0,00

+ **Cast iron dome ⌀ 200 mm with cast iron heat exchanger rings**		R015006-02	1	
Front variants:				
Door frame, black		SET213158		**6618,50**
Mounting frame, black 60 mm		SET213159		**6649,50**
Alternative article: connection piece eccentric instead of cast iron dome				
Connection piece eccentric ⌀ 200 mm		S003025		-206,00
Connection piece eccentric ⌀ 180 mm		S003024		-206,00
Additional options				
90° bend - dumper flap and cleaning ⌀ 200 mm		S002208		**329,00**
90° bend - dumper flap and cleaning ⌀ 180 mm		S002198		**306,00**

+ **Cast iron dome ⌀ 180 mm low**		D016042	1	
Front variants:				
Door frame, black		SET213160		**6299,50**
Mounting frame, black 60 mm		SET213161		**6330,50**

+ **Modular accumulator MAS 440 double-layered**		R009042	5	
Cast iron dome MAS ⌀ 180		R009095-01	1	
Mounting ring		10077	1	
Front variants:				
Door frame, black		SET213162		**7956,00**
Mounting frame, black 60 mm		SET213163		**7987,50**
Additional option MAS				
Exchange connectiong piece⌀ 200 mm		R009105		84,00
Exchange connectiong piece⌀ 160 mm		07137		84,00

+ **Boiler module**		W027070	1	
Front variants:				
Door frame, black		SET213347		**8289,00**
Mounting frame, black 60 mm		SET213348		**8320,00**
Additional option boiler module				
Conversion kit for top outlet		W027082		206,00

Energy efficiency index A +

BKH 5.0 flat 42-66 DT

Set consists of:	Art.-Nr.	No.	Price
BKH 5.0 flat 42-66 DT GK FR,		1	
Mounting bracket / door frame		1	
Chamotte inner lining set (FR)		1	

Additional options (for all smoke hood variants)			
EAS (see page7)			2199,00
Reduced price for EAS without display			-214,50
Glass ceramic coated (GKB)			145,00
Combustion chamber inner lining cast iron (FR/ Guss)			710,50
Catalyst module BKH 5.0	HK000210		1263,00
Supply air connection box ⌀ 125 mm included at EAS version	HK000135		145,00
Supply air connection box ⌀ 150 mm	HK000136		159,50
Heat protection panel backside	HK004450		217,50
Heat protection panel backside with one side wall	HK004450-01		356,00
Heat protection panel backside with two side walls	HK004450-02		513,50

Smoke hood variants:

+ **Cast iron hood ⌀ 200 mm**		10087	1	
Front variants:				
Mounting bracket		SET213164		**3987,50**
Door frame, black		SET213165		**4200,50**
Aditional option for cast iron dome				
Cast iron dome ⌀ 180 mm		D004186		0,00

+ **Cast iron dome ⌀ 200 mm with cast iron heat exchanger rings**		R015006-02	1	
Front variants:				
Mounting bracket		SET213166		**4670,50**
Door frame, black		SET213167		**4883,50**
Alternative article: connection piece eccentric instead of cast iron dome				
Connection piece eccentric ⌀ 200 mm		S003025		-206,00
Connection piece eccentric ⌀ 180 mm		S003024		-206,00
Additional options				
90° bend - dumper flap and cleaning ⌀ 200 mm		S002208		**329,00**
90° bend - dumper flap and cleaning ⌀ 180 mm		S002198		**306,00**

+ **Cast iron dome ⌀ 180 mm low**		D016042	1	
Front variants:				
Mounting bracket		SET213168		**4351,50**
Door frame, black		SET213169		**4564,50**

+ **Modular accumulator MAS 440 double-layered**		R009042	5	
Cast iron dome MAS ⌀ 180		R009095-01	1	
Mounting ring		10077	1	
Front variants:				
Mounting bracket		SET213170		**6008,00**
Door frame, black		SET213171		**6221,00**
Additional option MAS				
Exchange connectiong piece⌀ 200 mm		R009105		84,00
Exchange connectiong piece⌀ 160 mm		07137		84,00

+ **Boiler module**		W027070	1	
Front variants:				
Mounting bracket		SET213349		**6341,00**
Door frame, black		SET213350		**6554,00**
Additional option boiler module				
Conversion kit for top outlet		W027082		206,00

Energy efficiency index A +

BKH 5.0 flat 42-66 ST

Set consists of:	Art.-Nr.	No.	Price
BKH 5.0 flat 42-66 ST GK FR,		1	
Mounting frame 60 mm / door frame		1	
Chamotte inner lining set (FR)		1	

Additional options (for all smoke hood variants)			
EAS (see page7)			2199,00
Reduced price for EAS without display			-214,50
Glass ceramic coated (GKB)			145,00
Combustion chamber inner lining cast iron (FR/ Guss)			710,50
Catalyst module BKH 5.0	HK000210		1263,00
Supply air connection box ⌀ 125 mm included at EAS version	HK000135		145,00
Supply air connection box ⌀ 150 mm	HK000136		159,50
Heat protection panel backside	HK004450		217,50
Heat protection panel backside with one side wall	HK004450-01		356,00
Heat protection panel backside with two side walls	HK004450-02		513,50

Smoke hood variants:

+ **Cast iron hood ⌀ 200 mm**		10087	1	
Front variants:				
Door frame, black		SET213172		**6306,00**
Mounting frame, black 60 mm		SET213173		**6331,50**
Aditional option for cast iron dome				
Cast iron dome ⌀ 180 mm		D004186		0,00

+ **Cast iron dome ⌀ 200 mm with cast iron heat exchanger rings**		R015006-02	1	
Front variants:				
Door frame, black		SET213174		**6989,00**
Mounting frame, black 60 mm		SET213175		**7014,50**
Alternative article: connection piece eccentric instead of cast iron dome				
Connection piece eccentric ⌀ 200 mm		S003025		-206,00
Connection piece eccentric ⌀ 180 mm		S003024		-206,00
Additional options				
90° bend - dumper flap and cleaning ⌀ 200 mm		S002208		**329,00**
90° bend - dumper flap and cleaning ⌀ 180 mm		S002198		**306,00**

+ **Cast iron dome ⌀ 180 mm low**		D016042	1	
Front variants:				
Door frame, black		SET213176		**6670,00**
Mounting frame, black 60 mm		SET213177		**6695,50**

+ **Modular accumulator MAS 440 double-layered**	R009042	5	
Cast iron dome MAS ⌀ 180	R009095-01	1	
Mounting ring	10077	1	
Front variants:			
Door frame, black	SET213178		**8326,50**
Mounting frame, black 60 mm	SET213179		**8352,00**
Additional option MAS			
Exchange connectiong piece⌀ 200 mm	R009105		84,00
Exchange connectiong piece⌀ 160 mm	07137		84,00

+ **Boiler module**	W027070	1	
Front variants:			
Door frame, black	SET213351		**8659,50**
Mounting frame, black 60 mm	SET213352		**8685,00**
Additional option boiler module			
Conversion kit for top outlet	W027082		206,00

Energy efficiency index A +

BKH 5.0 flat 42-98 ST

Set consists of:	Art.-Nr.	No.	Price
BKH 5.0 flat 42-98 ST GK FR,		1	
Mounting frame 60 mm / door frame		1	
Chamotte inner lining set (FR)		1	

Additional options (for all smoke hood variants)			
EAS (see page7)			2199,00
Reduced price for EAS without display			-214,50
Glass ceramic coated (GKB)			246,50
Combustion chamber inner lining cast iron (FR/ Guss)			768,50
Catalyst module BKH 5.0	HK000210		1263,00
Supply air connection box ⌀ 125 mm included at EAS version	HK000135		145,00
Supply air connection box ⌀ 150 mm	HK000136		159,50

Smoke hood variants:

+ **Cast iron hood ⌀ 200 mm**	10087	1	
Front variants:			
Door frame, black	SET213265		**7336,50**
Mounting frame, black 60 mm	SET213266		**7363,00**
Aditional option for cast iron dome			
Cast iron dome ⌀ 180 mm	D004186		0,00

+ **Cast iron dome ⌀ 200 mm with cast iron heat exchanger rings**	R015006-04	1	
Front variants:			
Door frame, black	SET213267		**8702,00**
Mounting frame, black 60 mm	SET213268		**8729,00**
Alternative article: connection piece eccentric instead of cast iron dome			
Connection piece eccentric ⌀ 200 mm	S003025		-206,00
Connection piece eccentric ⌀ 180 mm	S003024		-206,00
Additional options			
90° bend - dumper flap and cleaning ⌀ 200 mm	S002208		**329,00**
90° bend - dumper flap and cleaning ⌀ 180 mm	S002198		**306,00**

+ **Modular accumulator MAS 440 double-layered**	R009042	5	
Cast iron dome MAS ⌀ 180	R009095-01	1	
Mounting ring	10077	1	
Front variants:			
Door frame, black	SET213269		**9357,00**
Mounting frame, black 60 mm	SET213270		**9383,50**
Additional option MAS			
Exchange connectiong piece⌀ 200 mm	R009105		84,00
Exchange connectiong piece⌀ 160 mm	07137		84,00

+ **Boiler module**		W027070	1	
Front variants:				
Door frame, black		SET213353		**9689,50**
Mounting frame, black 60 mm		SET213354		**9716,50**
Additional option boiler module				
Conversion kit for top outlet		W027082		206,00

Energy efficiency index A +

Indications of abbreviatons (see page4)

BKH 5.0 flat 50-82 ST

Set consists of:	Art.-Nr.	No.	Price
BKH 5.0 flat 50-82 ST GK FR,		1	
Mounting frame 60 mm / door frame		1	
Chamotte inner lining set (FR)		1	

Additional options (for all smoke hood variants)			
EAS (see page7)			2199,00
Reduced price for EAS without display			-214,50
Glass ceramic coated (GKB)			246,50
Combustion chamber inner lining cast iron (FR/ Guss)			725,00
Catalyst module BKH 5.0	HK000210		1263,00
Supply air connection box ⌀ 125 mm included at EAS version	HK000135		145,00
Supply air connection box ⌀ 150 mm	HK000136		159,50

Smoke hood variants:

+ **Cast iron hood ⌀ 200 mm**	10087	1	
Front variants:			
Door frame, black	SET213277		**7330,50**
Mounting frame, black 60 mm	SET213278		**7351,50**
Aditional option for cast iron dome			
Cast iron dome ⌀ 180 mm	D004186		0,00

+ **Cast iron dome ⌀ 200 mm with cast iron heat exchanger rings**	R015006-04	1	
Alternative article: connection piece eccentric instead of cast iron dome			
Connection piece eccentric ⌀ 200 mm	S003025		-206,00
Connection piece eccentric ⌀ 180 mm	S003024		-206,00
Additional options			
90° bend - dumper flap and cleaning ⌀ 200 mm	S002208		**329,00**
90° bend - dumper flap and cleaning ⌀ 180 mm	S002198		**306,00**
Front variants:			
Door frame, black	SET213279		**8696,50**
Mounting frame, black 60 mm	SET213280		**8717,50**

+ **Modular accumulator MAS 440 double-layered**	R009042	5	
Cast iron dome MAS ⌀ 180	R009095-01	1	
Mounting ring	10077	1	
Front variants:			
Door frame, black	SET213281		**9351,00**
Mounting frame, black 60 mm	SET213282		**9372,00**
Additional option MAS			
Exchange connectiong piece⌀ 200 mm	R009105		84,00
Exchange connectiong piece⌀ 160 mm	07137		84,00

+ **Boiler module**		W027070	1	
Front variants:				
Door frame, black		SET213355		**9684,00**
Mounting frame, black 60 mm		SET213356		**9705,00**
Additional option boiler module				
Conversion kit for top outlet		W027082		206,00

Energy efficiency index A +

Indications of abbreviatons (see page4)

BKH 5.0 flat 50-98 ST

Set consists of:	Art.-Nr.	No.	Price
BKH 5.0 flat 50-98 ST GK FR,		1	
Mounting frame 60 mm / door frame		1	
Chamotte inner lining set (FR)		1	

Additional options (for all smoke hood variants)			
EAS (see page7)			2199,00
Reduced price for EAS without display			-214,50
Glass ceramic coated (GKB)			256,50
Combustion chamber inner lining cast iron (FR/ Guss)			768,50
Catalyst module BKH 5.0	HK000210		1263,00
Supply air connection box ⌀ 125 mm included at EAS version	HK000135		145,00
Supply air connection box ⌀ 150 mm	HK000136		159,50

Smoke hood variants:

+ **Cast iron hood ⌀ 200 mm**	10087	1	
Front variants:			
Door frame, black	SET213180		**7534,00**
Mounting frame, black 60 mm	SET213181		**7561,00**
Aditional option for cast iron dome			
Cast iron dome ⌀ 180 mm	D004186		0,00

+ **Cast iron dome ⌀ 200 mm with cast iron heat exchanger rings**	R015006-04	1	
Front variants:			
Door frame, black	SET213182		**8899,50**
Mounting frame, black 60 mm	SET213183		**8926,00**
Alternative article: connection piece eccentric instead of cast iron dome			
Connection piece eccentric ⌀ 200 mm	S003025		-206,00
Connection piece eccentric ⌀ 180 mm	S003024		-206,00
Additional options			
90° bend - dumper flap and cleaning ⌀ 200 mm	S002208		**329,00**
90° bend - dumper flap and cleaning ⌀ 180 mm	S002198		**306,00**

+ **Modular accumulator MAS 440 double-layered**	R009042	5	
Cast iron dome MAS ⌀ 180	R009095-01	1	
Mounting ring	10077	1	
Front variants:			
Door frame, black	SET213186		**9555,00**
Mounting frame, black 60 mm	SET213187		**9581,50**
Additional option MAS			
Exchange connectiong piece⌀ 200 mm	R009105		84,00
Exchange connectiong piece⌀ 160 mm	07137		84,00

+ **Boiler module**		W027070	1	
Front variants:				
Door frame, black		SET213357		**9887,50**
Mounting frame, black 60 mm		SET213358		**9914,50**
Additional option boiler module				
Conversion kit for top outlet		W027082		206,00

Energy efficiency index A +

Indications of abbreviatons (see page4)

Architektur-Kamin 38/86 lifting door

Auslaufartikel

Set consists of:	Art.-Nr.	No.	Price
AK 38/86 lifting door, single glazing, outlet ⌀ 200 mm		1	
Door frame or mounting frame		1	
Chamotte lining set, bright, for AK 38/86		1	
Hot air convection top for AK 38/86		1	

Additional options			
EAS (see page 11)			2264,00
Reduced price for EAS without display			-214,50
Double glazing			464,00
Counterweights for non-self closing door	49097		67,50
Smoke pipe adapter for horizontal/vertical outlet	BSK7000-129		588,00
Exchange connectiong piece⌀ 180 mm	I019448		88,50

Available variants:

Front variants:				
Door frame, black		SET205844		**8281,00**
Mounting frame, black, 50 mm		SET205846		**8213,50**
Mounting frame, black, 70 mm		SET208909		**8243,50**

Energy efficiency class A

Architektur-Kamin 45/101 lifting door

Auslaufartikel

Set consists of:	Art.-Nr.	No.	Price
AK 45/101 lifting door, single glazing, outlet ⌀ 250 mm		1	
Door frame or mounting frame		1	
Chamotte lining set, bright, for AK 45/101		1	
Hot air convection top for AK 45/101		1	

Additional options			
EAS (see page 11)			2264,00
Reduced price for EAS without display			-214,50
Counterweights for non-self closing door	49097		67,50
Double glazing			587,50
Smoke pipe adapter for horizontal outlet	I019490		433,50
Exchange connectiong piece⌀ 180 mm	I019448		88,50
Exchange connectiong piece⌀ 200 mm	I019449		88,50

Available variants:

Front variants:				
Door frame - mounting frame		SET205850		**8819,00**
Mounting bracket, 50 mm		SET205852		**8749,50**
Mounting frame, black, 70 mm		SET208912		**8801,00**

Energy efficiency class A

Architektur-Kamin 53/121 lifting door

Auslaufartikel

Set consists of:	Art.-Nr.	No.	Price
AK 53/121 lifting door, single glazing, outlet ⌀ 250 mm		1	
Door frame or mounting frame		1	
Chamotte lining set, bright, for AK 53/121		1	

Additional options			
Counterweights for non-self closing door (lifting door only)	49097		67,50
Double glazing			739,50
Smoke pipe adapter for horizontal outlet	I019490		433,50
Exchange connectiong piece⌀ 200 mm	I019449		88,50

Available variants:

Front variants:				
Door frame, black		SET205860		**9666,50**
Mounting frame, black, 50 mm		SET205862		**9606,50**
Mounting frame, black, 70 mm		SET208915		**9634,00**

Energy efficiency index A +

Architektur-Kamin 53/166 lifting door

Auslaufartikel

Set consists of:	Art.-Nr.	No.	Price
AK 53/166 lifting door, single glazing, outlet ⌀ 250 mm		1	
Door frame or mounting frame		1	
Chamotte lining set, bright, for AK 53/166		1	

Additional options			
Counterweights for non-self closing door	49097		67,50
Double glazing			971,50
Smoke pipe adapter for horizontal outlet	I019490		433,50
Exchange connectiong piece⌀ 200 mm	I019449		88,50

Available variants:

Front variants:				
Door frame, black		SET205872		**10995,50**
Mounting frame, black, 50 mm		SET205874		**10894,00**
Mounting frame, black, 70 mm		SET208919		**10960,00**

Energy efficiency index A +

Stil-Kamin 51/67 side-opening door, single glazing

Auslaufartikel

Set consists of:	Art.-Nr.	No.	Price
Stil-Kamin 51/67, side-opening door, single glazing, outlet ⌀ 250 mm		1	
Door frame or mounting frame		1	
Chamotte lining kit (rill optic)		1	
hot air convection top		1	

Additional options			
EAS (see page 11)			2264,00
Reduced price for EAS without display			-214,50
Double glazing			419,00
Smoke pipe adapter for horizontal outlet	I019490		433,50
Exchange connectiong piece⌀ 180 mm	I019448		88,50
Exchange connectiong piece⌀ 200 mm	I019449		88,50

Available variants:

Front variants				
Door frame, black		SET210535		**5786,00**

Energy efficiency index A +

Stil-Kamin 51/67 lifting door, single glazing

Auslaufartikel

Set consists of:	Art.-Nr.	No..	Price
Stil-Kamin 51/67, lifting door, single glazing, outlet ⌀ 250 mm		1	
Door frame or mounting frame		1	
Chamotte lining kit (rill optic)		1	
hot air convection top		1	

Additional options			
EAS (see page 11)			2264,00
Reduced price for EAS without display			-214,50
Counterweights for non-self closing door	49097		67,50
Double glazing			419,00
Smoke pipe adapter for horizontal outlet	I019490		433,50
Exchange connectiong piece⌀ 180 mm	I019448		88,50
Exchange connectiong piece⌀ 200 mm	I019449		88,50

Available variants:

Front variants:				
Door frame, black		SET210537		**7024,00**
Mounting frame, black, 50 mm		SET210539		**7024,00**
Mounting frame, black 70 mm		SET210541		**7116,50**

Energy efficiency index A +

Stil-Kamin 53/88 lifting door, single glazing

Set consists of:	Art.-Nr.	No.	Price
Stil-Kamin 53/88 lifting door, single glazing		1	
Door frame or mounting frame		1	
Chamotte lining set (brick plates)		1	

Additional options (for all smoke hood variants)			
EAS (see page 11)			2264,00
Reduced price for EAS without display			-214,50
Double glazing			558,50
Counterweights for non-self closing door	49097		67,50
Inner linings (smooth)	I049224		-127,00

Smoke hood variants:

Cast iron hot air hood ⌀ 200 mm		R014022-01	1	
Front variants:				
Door frame, black		SET211008		**8153,50**
Mounting frame, black, 50 mm		SET211010		**8144,50**
Mounting frame, black, 70 mm		SET211012		**8186,50**
Additional option for steel smoke hood vertical				
Cast iron hot air hood ⌀ 250 mm		R014022-02		0,00
Cast iron hot air hood ⌀ 180 mm		R014022-03		0,00

+**Cast iron hood ⌀ 200 mm**		10087	1	
Front variants:				
Door frame, black		SET209972		**7908,50**
Mounting frame, black, 50 mm		SET209974		**7899,50**
Mounting frame, black, 70 mm		SET209978		**7941,50**
Aditional option for cast iron dome				
Cast iron dome ⌀ 180 mm		D004186		0,00

+ **Modular accumulator MAS 440 double-layered**		R009042	5	
Cast iron dome MAS ⌀ 180		R009095-01	1	
Mounting ring		10077	1	
Front variants:				
Door frame, black		SET209979		**9929,00**
Mounting frame, black, 50 mm		SET209981		**9920,00**
Mounting frame, black, 70 mm		SET209983		**9962,00**
Additional option MAS				
Exchange connectiong piece ⌀ 200 mm		R009105		84,00
Exchange connectiong piece ⌀ 160 mm		07137		84,00

Energy efficiency index A +

Stil-Kamin flat 62-76 ST GK S04.2

Set consists of:	Art.-Nr.	No.	Price
Stil-Kamin flat 62-76 ST GK S04.2		1	
Door frame or mounting frame		1	
Chamotte lining set (brick plates)		1	

Additional options (for all smoke hood variants)			
EAS (see page 11)			2264,00
Reduced price for EAS without display			-214,50
Glass ceramic coated (GKB)			281,50
Counterweights for non-self closing door	49097		67,50
Inner linings (smooth)	I003623		-148,50

Smoke hood variants:

+Cast iron hood ⌀ 200 mm		10087	1	
Front variants:				
Door frame, black		SET213399		**7995,50**
Mounting frame, black, 50 mm		SET213400		**7986,50**
Mounting frame, black, 70 mm		SET213401		**8028,50**
Aditional option for cast iron dome				
Cast iron dome ⌀ 180 mm		D004186		0,00

Cast iron dome ⌀ 200 mm with cast iron heat exchanger rings		R015006-02	1	
Front variants:				
Door frame, black		SET213402		**8678,50**
Mounting frame, black, 50 mm		SET213403		**8669,50**
Mounting frame, black, 70 mm		SET213404		**8711,50**
Alternative article: connection piece eccentric instead of cast iron dome				
Connection piece eccentric ⌀ 200 mm		S003025		-206,00
Connection piece eccentric ⌀ 180 mm		S003024		-206,00
Additional options				
90° bend - dumper flap and cleaning ⌀ 200 mm		S002208		**329,00**
90° bend - dumper flap and cleaning ⌀ 180 mm		S002198		**306,00**

+ Modular accumulator MAS 440 double-layered		R009042	5	
Cast iron dome MAS ⌀ 180		R009095-01	1	
Mounting ring		10077	1	
Front variants:				
Door frame, black		SET213405		**10016,00**
Mounting frame, black, 50 mm		SET213406		**10007,00**
Mounting frame, black, 70 mm		SET213407		**10049,00**
Additional option MAS				
Exchange connectiong piece ⌀ 200 mm		R009105		84,00
Exchange connectiong piece ⌀ 160 mm		07137		84,00

+ **Boiler module**		W027070	1	
Front variants:				
Door frame, black		SET213408		**10348,50**
Mounting frame, black, 50 mm		SET213409		**10340,00**
Mounting frame, black, 70 mm		SET213410		**10382,00**
Additional option boiler module				
Conversion kit for top outlet		W027082		206,00

Energy efficiency index A +

Auslaufartikel

Stil-Kamin 62/76 k lifting door, single glazing

Set consists of:	Art.-Nr.	No.	Price
Stil-Kamin 62/76 k lifting door, single glazing, outlet ⌀ 200 mm		1	
Door frame or mounting frame		1	
Chamotte lining set (brick plates)		1	

Additional options			
Double glazing			604,50
Counterweights for non-self closing door	49097		67,50
Exchange connectiong piece⌀ 180 mm	I058043		111,50

Available variants:

Front variants:				
Door frame, black		SET205295		**7477,50**
Mounting frame, black, 50 mm		SET205297		**7388,00**
Mounting frame, black, 70 mm		SET208902		**7465,50**

Energy efficiency index A +

Stil-Kamin 75/90 lifting door, single glazing

Set consists of:	Art.-Nr.	No.	Price
Stil-Kamin 75/90 lifting door, single glazing		1	
Door frame or mounting frame		1	
Chamotte lining set (brick plates)		1	

Additional options (for all smoke hood variants)			
EAS (see page 11)			2264,00
Reduced price for EAS without display			-214,50
Double glazing			776,00
Counterweights for non-self closing door	49097		67,50
Inner linings (smooth)	40987		-148,50

Smoke hood variants:

Cast iron hot air hood ⌀ 200 mm	R014022-01	1	
Front variants:			
Door frame, black	SET211015		**10832,00**
Mounting frame, black, 50 mm	SET211017		**10744,50**
Mounting frame, black, 70 mm	SET211018		**10852,50**
Additional option for steel smoke hood vertical			
Cast iron hot air hood ⌀ 250 mm	R014022-02		0,00
Cast iron hot air hood ⌀ 180 mm	R014022-03		0,00

+ **Cast iron hood ⌀ 200 mm**	10087	1	
Front variants:			
Door frame, black	SET209944		**10587,00**
Mounting frame, black, 50 mm	SET209946		**10499,50**
Mounting frame, black, 70 mm	SET209950		**10607,50**
Aditional option for cast iron dome			
Cast iron dome ⌀ 180 mm	D004186		0,00

+ **Modular accumulator MAS 440 double-layered**	R009042	5	
Cast iron dome MAS ⌀ 180	R009095-01	1	
Mounting ring	10077	1	
Front variants:			
Door frame, black	SET209951		**12608,00**
Mounting frame, black, 50 mm	SET209953		**12520,00**
Mounting frame, black, 70 mm	SET209955		**12628,00**
Additional option MAS			
Exchange connectiong piece ⌀ 200 mm	R009105		84,00
Exchange connectiong piece ⌀ 160 mm	07137		84,00

Energy efficiency index A +

BKH 5.0 Tunnel 42-50 DT-DT

Set consists of:	Art.-Nr.	No.	Price
BKH 5.0 Tunnel 42-50 DT-DT GK FR,		1	
Mounting bracket / door frame		2	
Chamotte inner lining set (FR)		1	

Additional options (for all smoke hood variants)			
EAS (see page7)			2199,00
Reduced price for EAS without display			-214,50
Glass ceramic coated (GKB)			274,00
Combustion chamber inner lining cast iron (FR/ Guss)			420,50
Catalyst module BKH 5.0	HK000210		1263,00
Supply air connection box ⌀ 125 mm included at EAS version	HK000135		145,00
Supply air connection box ⌀ 150 mm	HK000136		159,50
Heat protection panel for one side	HK014251		176,00
Attention: Tunnel inserts can only be operated on one side, the other side is equipped with an inspection handle. With the EAS version, only one door contact switch is installed on the operating side.			

Smoke hood variants:

+ **Cast iron hood ⌀ 200 mm**	10087	1	
Front variants:			
Mounting bracket	SET213188		**5278,00**
Door frame, black	SET213189		**5684,00**
Aditional option for cast iron dome			
Cast iron dome ⌀ 180 mm	D004186		0,00

+ **Cast iron dome ⌀ 200 mm with cast iron heat exchanger rings**	R015006-02	1	
Front variants:			
Mounting bracket	SET213190		**5961,00**
Door frame, black	SET213191		**6367,00**
Alternative article: connection piece eccentric instead of cast iron dome			
Connection piece eccentric ⌀ 200 mm	S003025		-206,00
Connection piece eccentric ⌀ 180 mm	S003024		-206,00
Additional options			
90° bend - dumper flap and cleaning ⌀ 200 mm	S002208		**329,00**
90° bend - dumper flap and cleaning ⌀ 180 mm	S002198		**306,00**

+ **Cast iron dome ⌀ 180 mm low**	D016042	1	
Front variants:			
Mounting bracket	SET213192		**5642,00**
Door frame, black	SET213193		**6048,00**

+ **Modular accumulator MAS 440 double-layered**		R009042	5	
Cast iron dome MAS ⌀ 180		R009095-01	1	
Mounting ring		10077	1	
Front variants:				
Mounting bracket		SET213194		**7298,50**
Door frame, black		SET213195		**7704,50**
Additional option MAS				
Exchange connectiong piece⌀ 200 mm		R009105		84,00
Exchange connectiong piece⌀ 160 mm		07137		84,00

+ **Boiler module**		W027070	1	
Front variants:				
Mounting bracket		SET213359		**7631,50**
Door frame, black		SET213360		**8037,50**
Additional option boiler module				
Conversion kit for top outlet		W027082		206,00

Energy efficiency index A +

BKH 5.0 Tunnel 42-50 ST-DT

Set consists of:	Art.-Nr.	No.	Price
BKH 5.0 Tunnel 42-50 ST-DT GK FR,		1	
Mounting frame 60 mm / door frame		2	
Chamotte inner lining set (FR)		1	

Additional options (for all smoke hood variants)			
EAS (see page7)			2199,00
Reduced price for EAS without display			-214,50
Glass ceramic coated (GKB)			274,00
Combustion chamber inner lining cast iron (FR/ Guss)			420,50
Catalyst module BKH 5.0	HK000210		1263,00
Supply air connection box ⌀ 125 mm included at EAS version	HK000135		145,00
Supply air connection box ⌀ 150 mm	HK000136		159,50
Heat protection panel for one side	HK014251		176,00

Attention: Tunnel inserts can only be operated on one side, the other side is equipped with an inspection handle. With the EAS version, only one door contact switch is installed on the operating side.
With ST-DT and ST-KT, the ST side is therefore the operable side.

Smoke hood variants:

+ **Cast iron hood ⌀ 200 mm**		10087	1	
Front variants:				
Door frame, black		SET213196		**8023,50**
Mounting frame, black 60 mm		SET213197		**7852,00**
Aditional option for cast iron dome				
Cast iron dome ⌀ 180 mm		D004186		0,00

+ **Cast iron dome ⌀ 200 mm with cast iron heat exchanger rings**		R015006-02	1	
Front variants:				
Door frame, black		SET213198		**8706,50**
Mounting frame, black 60 mm		SET213199		**8534,50**
Alternative article: connection piece eccentric instead of cast iron dome				
Connection piece eccentric ⌀ 200 mm		S003025		-206,00
Connection piece eccentric ⌀ 180 mm		S003024		-206,00
Additional options				
90° bend - dumper flap and cleaning ⌀ 200 mm		S002208		**329,00**
90° bend - dumper flap and cleaning ⌀ 180 mm		S002198		**306,00**

+ **Cast iron dome ⌀ 180 mm low**		D016042	1	
Front variants:				
Door frame, black		SET213200		**8387,50**
Mounting frame, black 60 mm		SET213201		**8215,50**

+ **Modular accumulator MAS 440 double-layered**	R009042	5	
Cast iron dome MAS ⌀ 180	R009095-01	1	
Mounting ring	10077	1	
Front variants:			
Door frame, black	SET213202		**10044,00**
Mounting frame, black 60 mm	SET213203		**9872,50**
Additional option MAS			
Exchange connectiong piece⌀ 200 mm	R009105		84,00
Exchange connectiong piece⌀ 160 mm	07137		84,00

+ **Boiler module**	W027070	1	
Front variants:			
Door frame, black	SET213361		**10377,00**
Mounting frame, black 60 mm	SET213362		**10205,00**
Additional option boiler module			
Conversion kit for top outlet	W027082		206,00

Energy efficiency index A +

BKH 5.0 Tunnel 42-66 DT-DT

Set consists of:	Art.-Nr.	No.	Price
BKH 5.0 Tunnel 42-66 DT-DT GK FR,		1	
Mounting bracket / door frame		2	
Chamotte inner lining set (FR)		1	

Additional options (for all smoke hood variants)			
EAS (see page7)			2199,00
Reduced price for EAS without display			-214,50
Glass ceramic coated (GKB)			290,00
Combustion chamber inner lining cast iron (FR/ Guss)			420,50
Catalyst module BKH 5.0	HK000210		1263,00
Supply air connection box ⌀ 125 mm included at EAS version	HK000135		145,00
Supply air connection box ⌀ 150 mm	HK000136		159,50
Heat protection panel for one side	HK014251		176,00
Attention: Tunnel inserts can only be operated on one side, the other side is equipped with an inspection handle. With the EAS version, only one door contact switch is installed on the operating side.			

Smoke hood variants:

+ **Cast iron hood ⌀ 200 mm**	10087	1	
Front variants:			
Mounting bracket	SET213204		**5640,50**
Door frame, black	SET213205		**6067,00**
Aditional option for cast iron dome			
Cast iron dome ⌀ 180 mm	D004186		0,00

+ **Cast iron dome ⌀ 200 mm with cast iron heat exchanger rings**	R015006-02	1	
Front variants:			
Mounting bracket	SET213206		**6323,50**
Door frame, black	SET213207		**6750,00**
Alternative article: connection piece eccentric instead of cast iron dome			
Connection piece eccentric ⌀ 200 mm	S003025		-206,00
Connection piece eccentric ⌀ 180 mm	S003024		-206,00
Additional options			
90° bend - dumper flap and cleaning ⌀ 200 mm	S002208		**329,00**
90° bend - dumper flap and cleaning ⌀ 180 mm	S002198		**306,00**

+ **Cast iron dome ⌀ 180 mm low**	D016042	1	
Front variants:			
Mounting bracket	SET213208		**6004,50**
Door frame, black	SET213209		**6431,00**

+ **Modular accumulator MAS 440 double-layered**		R009042	5	
Cast iron dome MAS ⌀ 180		R009095-01	1	
Mounting ring		10077	1	
Front variants:				
Mounting bracket		SET213210		**7661,00**
Door frame, black		SET213211		**8087,50**
Additional option MAS				
Exchange connectiong piece⌀ 200 mm		R009105		84,00
Exchange connectiong piece⌀ 160 mm		07137		84,00

+ **Boiler module**		W027070	1	
Front variants:				
Mounting bracket		SET213363		**7994,00**
Door frame, black		SET213364		**8420,00**
Additional option boiler module				
Conversion kit for top outlet		W027082		206,00

Energy efficiency index A +

BKH 5.0 Tunnel 42-66 ST-DT

Set consists of:	Art.-Nr.	No.	Price
BKH 5.0 Tunnel 42-66 ST-DT GK FR,		1	
Mounting frame 60 mm / door frame		2	
Chamotte inner lining set (FR)		1	

Additional options (for all smoke hood variants)			
EAS (see page7)			2199,00
Reduced price for EAS without display			-214,50
Glass ceramic coated (GKB)			290,00
Combustion chamber inner lining cast iron (FR/ Guss)			420,50
Catalyst module BKH 5.0	HK000210		1263,00
Supply air connection box ⌀ 125 mm included at EAS version	HK000135		145,00
Supply air connection box ⌀ 150 mm	HK000136		159,50
Heat protection panel for one side	HK014251		176,00

Attention: Tunnel inserts can only be operated on one side, the other side is equipped with an inspection handle. With the EAS version, only one door contact switch is installed on the operating side.
With ST-DT and ST-KT, the ST side is therefore the operable side.

Smoke hood variants:

+ **Cast iron hood ⌀ 200 mm**		10087	1	
Front variants:				
Door frame, black		SET213212		**8273,50**
Mounting frame, black 60 mm		SET213213		**8086,00**
Aditional option for cast iron dome				
Cast iron dome ⌀ 180 mm		D004186		0,00

+ **Cast iron dome ⌀ 200 mm with cast iron heat exchanger rings**		R015006-02	1	
Front variants:				
Door frame, black		SET213214		**8956,50**
Mounting frame, black 60 mm		SET213215		**8769,00**
Alternative article: connection piece eccentric instead of cast iron dome				
Connection piece eccentric ⌀ 200 mm		S003025		-206,00
Connection piece eccentric ⌀ 180 mm		S003024		-206,00
Additional options				
90° bend - dumper flap and cleaning ⌀ 200 mm		S002208		**329,00**
90° bend - dumper flap and cleaning ⌀ 180 mm		S002198		**306,00**

+ **Cast iron dome ⌀ 180 mm low**		D016042	1	
Front variants:				
Door frame, black		SET213216		**8637,50**
Mounting frame, black 60 mm		SET213217		**8450,00**

+ **Modular accumulator MAS 440 double-layered**	R009042	5	
Cast iron dome MAS ⌀ 180	R009095-01	1	
Mounting ring	10077	1	
Front variants:			
Door frame, black	SET213218		**10294,50**
Mounting frame, black 60 mm	SET213219		**10106,50**
Additional option MAS			
Exchange connectiong piece⌀ 200 mm	R009105		84,00
Exchange connectiong piece⌀ 160 mm	07137		84,00

+ **Boiler module**	W027070	1	
Front variants:			
Door frame, black	SET213365		**10627,00**
Mounting frame, black 60 mm	SET213366		**10439,50**
Additional option boiler module			
Conversion kit for top outlet	W027082		206,00

Energy efficiency index A +

BKH 5.0 Tunnel 42-98 ST-KT

Set consists of:	Art.-Nr.	No.	Price
BKH 5.0 Tunnel 42-98 ST-KT GK FR,		1	
Mounting frame 60 mm / door frame		2	
Chamotte inner lining set (FR)		1	

Additional options (for all smoke hood variants)			
EAS (see page7)			2199,00
Reduced price for EAS without display			-214,50
Glass ceramic coated (GKB)			493,00
Combustion chamber inner lining cast iron (FR/ Guss)			464,00
Catalyst module BKH 5.0	HK000210		1263,00
Supply air connection box ⌀ 125 mm included at EAS version	HK000135		145,00
Supply air connection box ⌀ 150 mm	HK000136		159,50

Attention: Tunnel inserts can only be operated on one side, the other side is equipped with an inspection handle. With the EAS version, only one door contact switch is installed on the operating side.
With ST-DT and ST-KT, the ST side is therefore the operable side.

Smoke hood variants:

+ **Cast iron hood ⌀ 200 mm**	10087	1	
Front variants:			
Door frame, black	SET213271		**9960,00**
Mounting frame, black 60 mm	SET213272		**10013,50**
Aditional option for cast iron dome			
Cast iron dome ⌀ 180 mm	D004186		0,00

+ **Cast iron dome ⌀ 200 mm with cast iron heat exchanger rings**	R015006-04	1	
Front variants:			
Door frame, black	SET213273		**11326,00**
Mounting frame, black 60 mm	SET213274		**11379,50**
Alternative article: connection piece eccentric instead of cast iron dome			
Connection piece eccentric ⌀ 200 mm	S003025		-206,00
Connection piece eccentric ⌀ 180 mm	S003024		-206,00
Additional options			
90° bend - dumper flap and cleaning ⌀ 200 mm	S002208		**329,00**
90° bend - dumper flap and cleaning ⌀ 180 mm	S002198		**306,00**

+ **Modular accumulator MAS 440 double-layered**	R009042	5	
Cast iron dome MAS ⌀ 180	R009095-01	1	
Mounting ring	10077	1	
Front variants:			
Door frame, black	SET213275		**11980,50**
Mounting frame, black 60 mm	SET213276		**12034,50**
Additional option MAS			
Exchange connectiong piece⌀ 200 mm	R009105		84,00
Exchange connectiong piece⌀ 160 mm	07137		84,00

+ **Boiler module**		W027070	1	
Front variants:				
Door frame, black		SET213367		**12313,50**
Mounting frame, black 60 mm		SET213368		**12367,00**
Additional option boiler module				
Conversion kit for top outlet		W027082		206,00

Energy efficiency index A +

BKH 5.0 Tunnel 50-82 ST-KT

Set consists of:	Art.-Nr.	No.	Price
BKH 5.0 Tunnel 50-82 ST-KT GK FR,		1	
Mounting frame 60 mm / door frame		2	
Chamotte inner lining set (FR)		1	

Additional options (for all smoke hood variants)			
EAS (see page7)			2199,00
Reduced price for EAS without display			-214,50
Glass ceramic coated (GKB)			493,00
Combustion chamber inner lining cast iron (FR/ Guss)			464,00
Catalyst module BKH 5.0	HK000210		1263,00
Supply air connection box ⌀ 125 mm included at EAS version	HK000135		145,00
Supply air connection box ⌀ 150 mm	HK000136		159,50

Attention: Tunnel inserts can only be operated on one side, the other side is equipped with an inspection handle. With the EAS version, only one door contact switch is installed on the operating side.
With ST-DT and ST-KT, the ST side is therefore the operable side.

Smoke hood variants:

+ **Cast iron hood ⌀ 200 mm**	10087	1	
Front variants:			
Door frame, black	SET213283		**9948,50**
Mounting frame, black 60 mm	SET213284		**9990,50**
Aditional option for cast iron dome			
Cast iron dome ⌀ 180 mm	D004186		0,00

+ **Cast iron dome ⌀ 200 mm with cast iron heat exchanger rings**	R015006-04	1	
Front variants:			
Door frame, black	SET213285		**11314,50**
Mounting frame, black 60 mm	SET213286		**11356,50**
Alternative article: connection piece eccentric instead of cast iron dome			
Connection piece eccentric ⌀ 200 mm	S003025		-206,00
Connection piece eccentric ⌀ 180 mm	S003024		-206,00
Additional options			
90° bend - dumper flap and cleaning ⌀ 200 mm	S002208		**329,00**
90° bend - dumper flap and cleaning ⌀ 180 mm	S002198		**306,00**

+ **Modular accumulator MAS 440 double-layered**	R009042	5	
Cast iron dome MAS ⌀ 180	R009095-01	1	
Mounting ring	10077	1	
Front variants:			
Door frame, black	SET213287		**11969,00**
Mounting frame, black 60 mm	SET213288		**12011,00**
Additional option MAS			
Exchange connectiong piece⌀ 200 mm	R009105		84,00
Exchange connectiong piece⌀ 160 mm	07137		84,00

+ **Boiler module**		W027070	1	
Front variants:				
Door frame, black		SET213369		**12302,00**
Mounting frame, black 60 mm		SET213370		**12344,00**
Additional option boiler module				
Conversion kit for top outlet		W027082		206,00

Energy efficiency index A +

BKH 5.0 Tunnel 50-98 ST-KT

Set consists of:	Art.-Nr.	No.	Price
BKH 5.0 Tunnel 50-98 ST-KT GK FR,		1	
Mounting frame 60 mm / door frame		2	
Chamotte inner lining set (FR)		1	

Additional options (for all smoke hood variants)			
EAS (see page7)			2199,00
Reduced price for EAS without display			-214,50
Glass ceramic coated (GKB)			513,50
Combustion chamber inner lining cast iron (FR/ Guss)			464,00
Catalyst module BKH 5.0	HK000210		1263,00
Supply air connection box ⌀ 125 mm included at EAS version	HK000135		145,00
Supply air connection box ⌀ 150 mm	HK000136		159,50

Attention: Tunnel inserts can only be operated on one side, the other side is equipped with an inspection handle. With the EAS version, only one door contact switch is installed on the operating side.
With ST-DT and ST-KT, the ST side is therefore the operable side.

Smoke hood variants:

+ **Cast iron hood ⌀ 200 mm**		10087	1	
Front variants:				
Door frame, black		SET213220		**10153,00**
Mounting frame, black 60 mm		SET213221		**10206,50**
Aditional option for cast iron dome				
Cast iron dome ⌀ 180 mm		D004186		0,00

+ **Cast iron dome ⌀ 200 mm with cast iron heat exchanger rings**		R015006-04	1	
Front variants:				
Door frame, black		SET213222		**11518,00**
Mounting frame, black 60 mm		SET213223		**11571,50**
Alternative article: connection piece eccentric instead of cast iron dome				
Connection piece eccentric ⌀ 200 mm		S003025		-206,00
Connection piece eccentric ⌀ 180 mm		S003024		-206,00
Additional options				
90° bend - dumper flap and cleaning ⌀ 200 mm		S002208		**329,00**
90° bend - dumper flap and cleaning ⌀ 180 mm		S002198		**306,00**

+ **Modular accumulator MAS 440 double-layered**		R009042	5	
Cast iron dome MAS ⌀ 180		R009095-01	1	
Mounting ring		10077	1	
Front variants:				
Door frame, black		SET213226		**12173,50**
Mounting frame, black 60 mm		SET213227		**12227,00**
Additional option MAS				
Exchange connectiong piece⌀ 200 mm		R009105		84,00
Exchange connectiong piece⌀ 160 mm		07137		84,00

+ **Boiler module**		W027070	1	
Front variants:				
Door frame, black		SET213371		**12506,50**
Mounting frame, black 60 mm		SET213372		**12560,00**
Additional option boiler module				
Conversion kit for top outlet		W027082		206,00

Energy efficiency index A +

Auslaufartikel

Architektur-Kamin Tunnel 38/86 lifting/tilting door

Set consists of:	Art.-Nr.	No.	Price
AK Tunnel/double face 38/86, lifting/tilting door, single glazing, outlet ⌀ 200 mm		1	
Door frame or mounting frame		2	
Chamotte lining set, bright, for AK Tunnel/double face 38/86		1	
Hot air convection top AK Tunnel 38/86		1	

Additional options			
EAS (see page 11)			2264,00
Reduced price for EAS without display			-214,50
Counterweights for non-self closing door (only one side possible)	49097		67,50
Double glazing (also one side only available on request)			928,00
Smoke pipe adapter for horizontal/vertical outlet	BSK7000-129		588,00
Exchange connectiong piece ⌀ 180 mm	I019448		88,50
Lifting doors on both sides available upon request			

Available variants:

Front variants:				
Door frame, black		SET205887		**11455,50**
Mounting frame, black, 50 mm		SET205889		**11321,00**
Mounting frame, black, 70 mm		SET208910		**11380,50**

Energy efficiency class A

Architektur-Kamin Tunnel 45/101 lifting/tilting door

Auslaufartikel

Set consists of:	Art.-Nr.	No.	Price
AK Tunnel/double face 45/101, lifting/tilting door, single glazing, outlet ⌀ 250 mm		1	
Door frame or mounting frame		2	
Chamotte lining set, bright, for AK Tunnel/double face 45/101		1	
Hot air convection top AK Tunnel 45/101		1	

Additional options			
EAS (see page 11)			2264,00
Reduced price for EAS without display			-214,50
Counterweights for non-self closing door (only one side possible)	49097		67,50
Double glazing (also one side only available on request)			1174,50
Smoke pipe adapter for horizontal outlet	I019490		433,50
Exchange connectiong piece⌀ 180 mm	I019448		88,50
Exchange connectiong piece⌀ 200 mm	I019449		88,50
Lifting doors on both sides available upon request			

Available variants:

Front variants:				
Door frame, black		SET205899		**12283,00**
Mounting frame, black, 50 mm		SET205901		**12144,00**
Mounting frame, black, 70 mm		SET208913		**12248,00**

Energy efficiency class A

Architektur-Kamin Tunnel 53/121 lifting/tilting door

Auslaufartikel

Set consists of:	Art.-Nr.	No.	Price
AK Tunnel/double face 53/121, lifting/tilting door, single glazing, outlet ⌀ 250 mm		1	
Door frame or mounting frame		2	
Chamotte lining set, bright, for AK Tunnel/double face 53/121		1	

Additional options			
Counterweights for non-self closing door (only one side possible)	49097		67,50
Double glazing (also one side only available on request)			1479,00
Smoke pipe adapter for horizontal outlet	I019490		433,50
Exchange connectiong piece ⌀ 200 mm	I019449		88,50
Lifting doors on both sides available upon request			

Available variants:

Front variants:				
Door frame, black		SET205911		**13257,50**
Mounting frame, black, 50 mm		SET205913		**13137,00**
Mounting frame, black, 70 mm		SET208916		**13192,00**

Energy efficiency index A +

Architektur-Kamin Tunnel 53/166 lifting/tilting door

Auslaufartikel

Set consists of:	Art.-Nr.	No.	Price
AK Tunnel/double face 53/166, lifting/tilting door, single glazing, outlet ⌀ 250 mm		1	
Door frame or mounting frame		2	
Chamotte lining set, bright, for AK Tunnel/double face 53/166		1	

Additional options			
Counterweights for non-self closing door (only one side possible)	49097		67,50
Double glazing (also one side only available on request)			1943,00
Smoke pipe adapter for horizontal outlet	I019490		433,50
Exchange connectiong piece⌀ 200 mm	I019449		88,50
Lifting doors on both sides available upon request			

Available variants:

Front variants:				
Door frame, black		SET205935		**15140,00**
Mounting frame, black, 50 mm		SET205937		**14937,00**
Mounting frame, black, 70 mm		SET208920		**15069,00**

Energy efficiency index A +

Stil-Kamin Tunnel 51/67 lifting door/side opening door

Auslaufartikel

Set consists of:	Art.-Nr.	No.	Price
Stil-KaminTunnel 51/67, lifting door/side opening door, single glazing, outlet ⌀ 250 mm		1	
Door frame or mounting frame (DT doors with door frames by default)		2	
Grooved chamotte lining		1	
hot air convection top		1	

Additional options			
EAS (see page 11)			2474,50
Reduced price for EAS without display			-214,50
Counterweights for non-self closing door	49097		67,50
Double glazing (also one side only available on request)			838,00
Smoke pipe adapter for horizontal outlet	I019490		433,50
Exchange connectiong piece⌀ 180 mm	I019448		88,50
Exchange connectiong piece⌀ 200 mm	I019449		88,50
Revision handle	02426		188,50
Lifting doors on both sides available upon request			

Available variants:

Front variants:				
Door frame, black		SET210546		**10688,50**
Door frame, black DT Mounting frame, black ST 50 mm		SET210548		**10688,50**
Door frame, black DT Mounting frame, black ST 70 mm		SET210550		**10781,50**

Energy efficiency index A +

Stil-KaminTunnel 53/88 lifting/tilting door

Set consists of:	Art.-Nr.	No.	Price
Stil-KaminTunnel 53/88, lifting/tilting door, single glazing, outlet ⌀ 250 mm		1	
Door frame or mounting frame		2	
Inner lining set for 53/88		1	

Additional options			
Counterweights for non-self closing door (lifting door only)	49097		67,50
Double glazing (also one side only available on request)			1116,50
Spare connecting piece ⌀ 180 mm	I019448		88,50
Exchange connectiong piece⌀ 200 mm	I019449		88,50
Lifting doors on both sides available upon request			

Available variants:

Front variants:				
Door frame, black		SET207104		**11363,50**
Mounting frame, black, 50 mm		SET207106		**11346,50**
Mounting frame, black, 70 mm		SET208907		**11430,50**

Energy efficiency index A +

Stil-KaminTunnel 62/76 lifting/tilting door

Set consists of:	Art.-Nr.	No.	Price
Stil-KaminTunnel 62/76, lifting/tilting door, single glazing, outlet ⌀ 250 mm		1	
Door frame or mounting frame		2	
Inner lining set for 62/76		1	

Additional options			
Counterweights for non-self closing door (lifting door only)	49097		67,50
Double glazing (also one side only available on request)			1209,50
Spare connecting piece ⌀ 180 mm	I019448		88,50
Exchange connectiong piece⌀ 200 mm	I019449		88,50
Lifting doors on both sides available upon request			

Available variants:

Front variants:				
Door frame, black		SET205826		**11711,50**
Mounting frame, black, 50 mm		SET205828		**11532,00**
Mounting frame, black, 70 mm		SET208901		**11687,00**

Energy efficiency index A +

Stil-KaminTunnel 75/90 lifting/tilting door

Set consists of:	Art.-Nr.	No.	Price
Stil-KaminTunnel 75/90, lifting/tilting door, single glazing, outlet ⌀ 250 mm		1	
Door frame or mounting frame		2	
Inner lining set for 75/90		1	

Additional options			
Counterweights for non-self closing door (lifting door only)	49097		67,50
Double glazing (also one side only available on request)			1551,50
Spare connecting piece ⌀ 180 mm	I019448		88,50
Exchange connectiong piece⌀ 200 mm	I019449		88,50
Lifting doors on both sides available upon request			

Available variants:

Front variants:				
Door frame, black		SET205838		**13259,50**
Mounting frame, black, 50 mm		SET205840		**13084,00**
Mounting frame, black, 70 mm		SET208904		**13300,00**

Energy efficiency index A +

BKH 5.0 Eck 42-66-42 DTL

Set consists of:	Art.-Nr.	No.	Price
BKH 5.0 Eck 42-66-42 DTL GK FR,		1	
Mounting bracket / Door frame		1	
Chamotte inner lining set (FR)		1	

Additional options (for all smoke hood variants)			
EAS (see page11)			2199,00
Reduced price for EAS without display			-214,50
Glass ceramic coated (GKB)			362,50
Combustion chamber inner lining cast iron (FR/ Guss)			478,50
Catalyst module BKH 5.0	HK000210		1263,00
Supply air connection box ⌀ 125 mm included at EAS version	HK000135		145,00
Supply air connection box ⌀ 150 mm	HK000136		159,50
Heat protection panel with one side wall	HK021450		391,50

Smoke hood variants:

+ **Cast iron hood ⌀ 200 mm**		10087	1	
Front variants:				
Mounting bracket		SET213289		**5060,50**
Door frame, black		SET213290		**5387,00**
Aditional option for cast iron dome				
Cast iron dome ⌀ 180 mm		D004186		0,00

+ **Cast iron dome ⌀ 200 mm with cast iron heat exchanger rings**		R015006-02	1	
Front variants:				
Mounting bracket		SET213291		**5743,50**
Door frame, black		SET213292		**6069,50**
Alternative article: connection piece eccentric instead of cast iron dome				
Connection piece eccentric ⌀ 200 mm		S003025		-206,00
Connection piece eccentric ⌀ 180 mm		S003024		-206,00
Additional options				
90° bend - dumper flap and cleaning ⌀ 200 mm		S002208		**329,00**
90° bend - dumper flap and cleaning ⌀ 180 mm		S002198		**306,00**

+ **Cast iron dome ⌀ 180 mm low**		D016042	1	
Front variants:				
Mounting bracket		SET213293		**5424,50**
Door frame, black		SET213294		**5750,50**

+ **Modular accumulator MAS 440 double-layered**		R009042	5	
Cast iron dome MAS ⌀ 180		R009095-01	1	
Mounting ring		10077	1	
Front variants:				
Mounting bracket		SET213295		**7081,00**
Door frame, black		SET213296		**7407,50**
Additional option MAS				
Exchange connectiong piece⌀ 200 mm		R009105		84,00
Exchange connectiong piece⌀ 160 mm		07137		84,00

+ **Boiler module**		W027070	1	
Front variants:				
Mounting bracket		SET213373		**7414,00**
Door frame, black		SET213374		**7740,00**
Additional option boiler module				
Conversion kit for top outlet		W027082		206,00

Energy efficiency index A +

BKH 5.0 Eck 42-66-42 DTR

Set consists of:	Art.-Nr.	No.	Price
BKH 5.0 Eck 42-66-42 DTR GK FR,		1	
Mounting bracket / Door frame		1	
Chamotte inner lining set (FR)		1	

Additional options (for all smoke hood variants)			
EAS (see page11)			2199,00
Reduced price for EAS without display			-214,50
Glass ceramic coated (GKB)			362,50
Combustion chamber inner lining cast iron (FR/ Guss)			478,50
Catalyst module BKH 5.0	HK000210		1263,00
Supply air connection box ⌀ 125 mm included at EAS version	HK000135		145,00
Supply air connection box ⌀ 150 mm	HK000136		159,50
Heat protection panel with one side wall	HK021450		391,50

Smoke hood variants:

+ **Cast iron hood ⌀ 200 mm**		10087	1	
Front variants:				
Mounting bracket		SET213297		**5060,50**
Door frame, black		SET213298		**5387,00**
Aditional option for cast iron dome				
Cast iron dome ⌀ 180 mm		D004186		0,00

+ **Cast iron dome ⌀ 200 mm with cast iron heat exchanger rings**		R015006-02	1	
Front variants:				
Mounting bracket		SET213299		**5743,50**
Door frame, black		SET213300		**6069,50**
Alternative article: connection piece eccentric instead of cast iron dome				
Connection piece eccentric ⌀ 200 mm		S003025		-206,00
Connection piece eccentric ⌀ 180 mm		S003024		-206,00
Additional options				
90° bend - dumper flap and cleaning ⌀ 200 mm		S002208		**329,00**
90° bend - dumper flap and cleaning ⌀ 180 mm		S002198		**306,00**

+ **Cast iron dome ⌀ 180 mm low**		D016042	1	
Front variants:				
Mounting bracket		SET213301		**5424,50**
Door frame, black		SET213302		**5750,50**

+ **Modular accumulator MAS 440 double-layered**		R009042	5	
Cast iron dome MAS ⌀ 180		R009095-01	1	
Mounting ring		10077	1	
Front variants:				
Mounting bracket		SET213303		**7081,00**
Door frame, black		SET213304		**7407,50**
Additional option MAS				
Exchange connectiong piece⌀ 200 mm		R009105		84,00
Exchange connectiong piece⌀ 160 mm		07137		84,00

+ **Boiler module**		W027070	1	
Front variants:				
Mounting bracket		SET213375		**7414,00**
Door frame, black		SET213376		**7740,00**
Additional option boiler module				
Conversion kit for top outlet		W027082		206,00

Energy efficiency index A +

BKH 5.0 Eck 42-66-42 STL

Set consists of:	Art.-Nr.	No.	Price
BKH 5.0 Eck 42-66-42 STL GK FR,		1	
Mounting frame 60 mm		1	
Chamotte inner lining set (FR)		1	

Additional options (for all smoke hood variants)			
EAS (see page11)			2199,00
Reduced price for EAS without display			-214,50
Glass ceramic coated (GKB)			362,50
Combustion chamber inner lining cast iron (FR/ Guss)			478,50
Catalyst module BKH 5.0	HK000210		1263,00
Supply air connection box ⌀ 125 mm included at EAS version	HK000135		145,00
Supply air connection box ⌀ 150 mm	HK000136		159,50
Heat protection panel with one side wall	HK021450		391,50

Smoke hood variants:

+ **Cast iron hood ⌀ 200 mm**	10087	1	
Front variants:			
Mounting frame, black 60 mm	SET213305		**7090,50**
Aditional option for cast iron dome			
Cast iron dome ⌀ 180 mm	D004186		0,00

+ **Cast iron dome ⌀ 200 mm with cast iron heat exchanger rings**	R015006-02	1	
Front variants:			
Mounting frame, black 60 mm	SET213306		**7773,50**
Alternative article: connection piece eccentric instead of cast iron dome			
Connection piece eccentric ⌀ 200 mm	S003025		-206,00
Connection piece eccentric ⌀ 180 mm	S003024		-206,00
Additional options			
90° bend - dumper flap and cleaning ⌀ 200 mm	S002208		**329,00**
90° bend - dumper flap and cleaning ⌀ 180 mm	S002198		**306,00**

+ **Modular accumulator MAS 440 double-layered**	R009042	5	
Cast iron dome MAS ⌀ 180	R009095-01	1	
Mounting ring	10077	1	
Front variants:			
Mounting frame, black 60 mm	SET213307		**9111,00**
Additional option MAS			
Exchange connectiong piece⌀ 200 mm	R009105		84,00
Exchange connectiong piece⌀ 160 mm	07137		84,00

+ **Boiler module**	W027070	1	
Front variants:			
Mounting frame, black 60 mm	SET213377		**9444,00**
Additional option boiler module			
Conversion kit for top outlet	W027082		206,00

Energy efficiency index A +

BKH 5.0 Eck 42-66-42 STR

Set consists of:	Art.-Nr.	No.	Price
BKH 5.0 Eck 42-66-42 STR GK FR,		1	
Mounting frame 60 mm		1	
Chamotte inner lining set (FR)		1	

Additional options (for all smoke hood variants)			
EAS (see page11)			2199,00
Reduced price for EAS without display			-214,50
Glass ceramic coated (GKB)			362,50
Combustion chamber inner lining cast iron (FR/ Guss)			478,50
Catalyst module BKH 5.0	HK000210		1263,00
Supply air connection box ⌀ 125 mm included at EAS version	HK000135		145,00
Supply air connection box ⌀ 150 mm	HK000136		159,50
Heat protection panel with one side wall	HK021450		391,50

Smoke hood variants:

+ **Cast iron hood ⌀ 200 mm**	10087	1	
Front variants:			
Mounting frame, black 60 mm	SET213308		**7090,50**
Aditional option for cast iron dome			
Cast iron dome ⌀ 180 mm	D004186		0,00

+ **Cast iron dome ⌀ 200 mm with cast iron heat exchanger rings**	R015006-02	1	
Front variants:			
Mounting frame, black 60 mm	SET213309		**7773,50**
Alternative article: connection piece eccentric instead of cast iron dome			
Connection piece eccentric ⌀ 200 mm	S003025		-206,00
Connection piece eccentric ⌀ 180 mm	S003024		-206,00
Additional options			
90° bend - dumper flap and cleaning ⌀ 200 mm	S002208		**329,00**
90° bend - dumper flap and cleaning ⌀ 180 mm	S002198		**306,00**

+ **Modular accumulator MAS 440 double-layered**	R009042	5	
Cast iron dome MAS ⌀ 180	R009095-01	1	
Mounting ring	10077	1	
Front variants:			
Mounting frame, black 60 mm	SET213310		**9111,00**
Additional option MAS			
Exchange connectiong piece⌀ 200 mm	R009105		84,00
Exchange connectiong piece⌀ 160 mm	07137		84,00

+ **Boiler module**	W027070	1	
Front variants:			
Mounting frame, black 60 mm	SET213378		**9444,00**
Additional option boiler module			
Conversion kit for top outlet	W027082		206,00

Energy efficiency index A +

BKH 5.0 Eck 42-98-42 STL

Set consists of:	Art.-Nr.	No.	Price
BKH 5.0 Eck 42-98-42 STL GK FR,		1	
Mounting frame 60 mm		1	
Chamotte inner lining set (FR)		1	

Additional options (for all smoke hood variants)			
EAS (see page11)			2199,00
Reduced price for EAS without display			-214,50
Glass ceramic coated (GKB)			464,00
Combustion chamber inner lining cast iron (FR/ Guss)			522,00
Catalyst module BKH 5.0	HK000210		1263,00
Supply air connection box ⌀ 125 mm included at EAS version	HK000135		145,00
Supply air connection box ⌀ 150 mm	HK000136		159,50

Smoke hood variants:

+ **Cast iron hood ⌀ 200 mm**	10087	1	
Front variants:			
Mounting frame, black 60 mm	SET213311		**7931,50**
Aditional option for cast iron dome			
Cast iron dome ⌀ 180 mm	D004186		0,00

+ **Cast iron dome ⌀ 200 mm with cast iron heat exchanger rings**	R015006-04	1	
Front variants:			
Mounting frame, black 60 mm	SET213312		**9296,50**
Alternative article: connection piece eccentric instead of cast iron dome			
Connection piece eccentric ⌀ 200 mm	S003025		-206,00
Connection piece eccentric ⌀ 180 mm	S003024		-206,00
Additional options			
90° bend - dumper flap and cleaning ⌀ 200 mm	S002208		**329,00**
90° bend - dumper flap and cleaning ⌀ 180 mm	S002198		**306,00**

+ **Modular accumulator MAS 440 double-layered**	R009042	5	
Cast iron dome MAS ⌀ 180	R009095-01	1	
Mounting ring	10077	1	
Front variants:			
Mounting frame, black 60 mm	SET213313		**9952,00**
Additional option MAS			
Exchange connectiong piece⌀ 200 mm	R009105		**84,00**
Exchange connectiong piece⌀ 160 mm	07137		**84,00**

+ **Boiler module**	W027070	1	
Front variants:			
Mounting frame, black	SET213379		**10285,00**
Additional option boiler module			
Conversion kit for top outlet	W027082		**206,00**

Energy efficiency index A +

BKH 5.0 Eck 42-98-42 STR

Set consists of:	Art.-Nr.	No.	Price
BKH 5.0 Eck 42-98-42 STR GK FR,		1	
Mounting frame 60 mm		1	
Chamotte inner lining set (FR)		1	

Additional options (for all smoke hood variants)			
EAS (see page11)			2199,00
Reduced price for EAS without display			-214,50
Glass ceramic coated (GKB)			464,00
Combustion chamber inner lining cast iron (FR/ Guss)			522,00
Catalyst module BKH 5.0	HK000210		1263,00
Supply air connection box ⌀ 125 mm included at EAS version	HK000135		145,00
Supply air connection box ⌀ 150 mm	HK000136		159,50

Smoke hood variants:

+ **Cast iron hood ⌀ 200 mm**	10087	1	
Front variants:			
Mounting frame, black 60 mm	SET213314		**7931,50**
Aditional option for cast iron dome			
Cast iron dome ⌀ 180 mm	D004186		0,00

+ **Cast iron dome ⌀ 200 mm with cast iron heat exchanger rings**	R015006-04	1	
Front variants:			
Mounting frame, black 60 mm	SET213315		**9296,50**
Alternative article: connection piece eccentric instead of cast iron dome			
Connection piece eccentric ⌀ 200 mm	S003025		-206,00
Connection piece eccentric ⌀ 180 mm	S003024		-206,00
Additional options			
90° bend - dumper flap and cleaning ⌀ 200 mm	S002208		**329,00**
90° bend - dumper flap and cleaning ⌀ 180 mm	S002198		**306,00**

+ **Modular accumulator MAS 440 double-layered**	R009042	5	
Cast iron dome MAS ⌀ 180	R009095-01	1	
Mounting ring	10077	1	
Front variants:			
Mounting frame, black 60 mm	SET213316		**9952,00**
Additional option MAS			
Exchange connectiong piece⌀ 200 mm	R009105		84,00
Exchange connectiong piece⌀ 160 mm	07137		84,00

+ **Boiler module**	W027070	1	
Front variants:			
Mounting frame, black 60 mm	SET213380		**10285,00**
Additional option boiler module			
Conversion kit for top outlet	W027082		206,00

Energy efficiency index A +

BKH 5.0 Eck 50-82-42 STL

Set consists of:	Art.-Nr.	No.	Price
BKH 5.0 Eck 50-82-42 STL GK FR,		1	
Mounting frame 60 mm		1	
Chamotte inner lining set (FR)		1	

Additional options (for all smoke hood variants)			
EAS (see page11)			2199,00
Reduced price for EAS without display			-214,50
Glass ceramic coated (GKB)			507,50
Combustion chamber inner lining cast iron (FR/ Guss)			493,00
Catalyst module BKH 5.0	HK000210		1263,00
Supply air connection box ⌀ 125 mm included at EAS version	HK000135		145,00
Supply air connection box ⌀ 150 mm	HK000136		159,50

Smoke hood variants:

+ **Cast iron hood ⌀ 200 mm**	10087	1	
Front variants:			
Mounting frame, black 60 mm	SET213317		**7525,50**
Aditional option for cast iron dome			
Cast iron dome ⌀ 180 mm	D004186		0,00

+ **Cast iron dome ⌀ 200 mm with cast iron heat exchanger rings**	R015006-04	1	
Front variants:			
Mounting frame, black 60 mm	SET213318		**8890,50**
Alternative article: connection piece eccentric instead of cast iron dome			
Connection piece eccentric ⌀ 200 mm	S003025		-206,00
Connection piece eccentric ⌀ 180 mm	S003024		-206,00
Additional options			
90° bend - dumper flap and cleaning ⌀ 200 mm	S002208		**329,00**
90° bend - dumper flap and cleaning ⌀ 180 mm	S002198		**306,00**

+ **Modular accumulator MAS 440 double-layered**	R009042	5	
Cast iron dome MAS ⌀ 180	R009095-01	1	
Mounting ring	10077	1	
Front variants:			
Mounting frame, black 60 mm	SET213319		**9546,00**
Additional option MAS			
Exchange connectiong piece⌀ 200 mm	R009105		84,00
Exchange connectiong piece⌀ 160 mm	07137		84,00

+ **Boiler module**	W027070	1	
Front variants:			
Mounting frame, black 60 mm	SET213381		**9879,00**
Additional option boiler module			
Conversion kit for top outlet	W027082		206,00

Energy efficiency index A +

BKH 5.0 Eck 50-82-42 STR

Set consists of:	Art.-Nr.	No.	Price
BKH 5.0 Eck 50-82-42 STR GK FR,		1	
Mounting frame 60 mm		1	
Chamotte inner lining set (FR)		1	

Additional options (for all smoke hood variants)			
EAS (see page11)			2199,00
Reduced price for EAS without display			-214,50
Glass ceramic coated (GKB)			507,50
Combustion chamber inner lining cast iron (FR/ Guss)			493,00
Catalyst module BKH 5.0	HK000210		1263,00
Supply air connection box ⌀ 125 mm included at EAS version	HK000135		145,00
Supply air connection box ⌀ 150 mm	HK00036		159,50

Smoke hood variants:

+ **Cast iron hood ⌀ 200 mm**	10087	1	
Front variants:			
Mounting frame, black 60 mm	SET213320		**7525,50**
Aditional option for cast iron dome			
Cast iron dome ⌀ 180 mm	D004186		0,00

+ **Cast iron dome ⌀ 200 mm with cast iron heat exchanger rings**	R015006-04	1	
Front variants:			
Mounting frame, black 60 mm	SET213321		**8890,50**
Alternative article: connection piece eccentric instead of cast iron dome			
Connection piece eccentric ⌀ 200 mm	S003025		-206,00
Connection piece eccentric ⌀ 180 mm	S003024		-206,00
Additional options			
90° bend - dumper flap and cleaning ⌀ 200 mm	S002208		**329,00**
90° bend - dumper flap and cleaning ⌀ 180 mm	S002198		**306,00**

+ **Modular accumulator MAS 440 double-layered**	R009042	5	
Cast iron dome MAS ⌀ 180	R009095-01	1	
Mounting ring	10077	1	
Front variants:			
Mounting frame, black 60 mm	SET213322		**9546,00**
Additional option MAS			
Exchange connectiong piece⌀ 200 mm	R009105		84,00
Exchange connectiong piece⌀ 160 mm	07137		84,00

+ **Boiler module**	W027070	1	
Front variants:			
Mounting frame, black 60 mm	SET213382		**9879,00**
Additional option boiler module			
Conversion kit for top outlet	W027082		206,00

Energy efficiency index A +

Eck-Kamin 51/52/52 side-opening door

Auslaufartikel

Set consists of:	Art.-Nr.	No.	Price
Eck-Kamin 51/52/52 side-opening door, two-piece ceramic glass		1	
Door frame		1	
Chamotte lining set, bright, for Eck-Kamin 51/52/52 u. 57/52/52		1	

Additional options (for all smoke hood variants)			
EAS (see page 11)			2264,00
EAS at DHT			2474,50
Reduced price for EAS without display			-214,50
Revision handle	02426		188,50
Chamotte lining, anthracite	40986-02		304,50

Additional charging door	
left side	right side
1493,50	1493,50

Smoke hood variants:

Cast iron hot air hood ⌀ 200 mm	R014022-01	1	
Front variants:			
Door frame, black	SET210370		**5811,00**
Additional option for cast iron hot air hood			
Cast iron hot air hood ⌀ 250 mm	R014022-02		0,00
Cast iron hot air hood ⌀ 180 mm	R014022-03		0,00

+ **Cast iron hood ⌀ 200 mm**	10087	1	
Front variants:			
Door frame, black	SET209986		**5566,00**
Aditional option for cast iron dome			
Cast iron dome ⌀ 180 mm	D004186		0,00

+ **Modular accumulator MAS 440 double-layered**	R009042	5	
Cast iron dome MAS ⌀ 180	R009095-01	1	
Mounting ring	10077	1	
Front variants:			
Door frame, black	SET209988		**7586,50**
Additional option MAS			
Exchange connectiong piece ⌀ 200 mm	R009105		84,00
Exchange connectiong piece⌀ 160 mm	07137		84,00

Energy efficiency index A +

Eck-Kamin 57/52/52 side-opening door

Auslaufartikel

Set consists of:	Art.-Nr.	No.	Price
Eck-Kamin 57/52/52 side-opening door, two-piece ceramic glass		1	
Door frame		1	
Chamotte lining set, bright, for Eck-Kamin 51/52/52 u. 57/52/52		1	

Additional options (for all smoke hood variants)			
EAS (see page 11)			2264,00
EAS at DHT			2474,50
Reduced price for EAS without display			-214,50
Revision handle	02426		188,50
Chamotte lining, anthracite	40986-02		304,50

Additional charging door	
left side	right side
1493,50	1493,50

Smoke hood variants:

Cast iron hot air hood ⌀ 200 mm	R014022-01	1	
Front variants:			
Door frame, black	SET210482		**6009,00**
Additional option for cast iron hot air hood			
Cast iron hot air hood ⌀ 250 mm	R014022-02		0,00
Cast iron hot air hood ⌀ 180 mm	R014022-03		0,00

+ **Cast iron hood ⌀ 200 mm**	10087	1	
Front variants:			
Door frame, black	SET209990		**5764,00**
Aditional option for cast iron dome			
Cast iron dome ⌀ 180 mm	D004186		0,00

+ **Modular accumulator MAS 440 double-layered**	R009042	5	
Cast iron dome MAS ⌀ 180	R009095-01	1	
Mounting ring	10077	1	
Front variants:			
Door frame, black	SET209992		**7784,50**
Additional option MAS			
Exchange connectiong piece ⌀ 200 mm	R009105		84,00
Exchange connectiong piece⌀ 160 mm	07137		84,00

Energy efficiency index A +

Eck-Kamin 57/52/52 lifting door

Auslaufartikel

Set consists of:	Art.-Nr.	No.	Price
Eck-Kamin 57/52/52 lifting door, two-piece ceramic glass		1	
Mounting frame		1	
Chamotte lining set, bright, for Eck-Kamin 51/52/52 u. 57/52/52		1	

Additional options (for all smoke hood variants)			
EAS (see page 11)			2264,00
Reduced price for EAS without display			-214,50
Counterweights for non-self closing door	49097		67,50
Chamotte lining, anthracite	40986-02		304,50

Smoke hood variants:

Cast iron hot air hood ⌀ 200 mm	R014022-01	1	
Front variants:			
Mounting frame, black, 50 mm	SET210377		**7440,50**
Mounting frame, black, 70 mm	SET210379		**7638,00**
Additional option for cast iron hot air hood			
Cast iron hot air hood ⌀ 250 mm	R014022-02		0,00
Cast iron hot air hood ⌀ 180 mm	R014022-03		0,00

+ **Cast iron hood ⌀ 200 mm**	10087	1	
Front variants:			
Mounting frame, black, 50 mm	SET210004		**7195,50**
Mounting frame, black, 70 mm	SET210006		**7393,00**
Aditional option for cast iron dome			
Cast iron dome ⌀ 180 mm	D004186		0,00

+ **Modular accumulator MAS 440 double-layered**	R009042	5	
Cast iron dome MAS ⌀ 180	R009095-01	1	
Mounting ring	10077	1	
Front variants:			
Mounting frame, black, 50 mm	SET210009		**9216,00**
Mounting frame, black, 70 mm	SET210011		**9413,50**
Additional option MAS			
Exchange connectiong piece ⌀ 200 mm	R009105		84,00
Exchange connectiong piece⌀ 160 mm	07137		84,00

Energy efficiency index A +

Eck-Kamin 45/82/48 left side lifting door

Auslaufartikel

Set consists of:	Art.-Nr.	No.	Price
Eck-Kamin 45/82/48 left side lifting door, two-piece ceramic glass		1	
Mounting frame		1	
Chamotte lining set, bright, for Eck-Kamin 45/82/48 left side		1	

Additional options (for all smoke hood variants)			
EAS (see page 11)			2264,00
Reduced price for EAS without display			-214,50
Counterweights for non-self closing door	49097		67,50
Chamotte lining, anthracite	I063038-02		304,50

Smoke hood variants:

Cast iron hot air hood ⌀ 200 mm	R014022-01	1	
Front variants:			
Mounting frame, black, 50 mm	SET210457		**8703,00**
Mounting frame, black, 70 mm	SET210459		**8901,00**
Additional option for cast iron hot air hood			
Cast iron hot air hood ⌀ 250 mm	R014022-02		0,00
Cast iron hot air hood ⌀ 180 mm	R014022-03		0,00

+ **Cast iron hood ⌀ 200 mm**	10087	1	
Front variants:			
Mounting frame, black, 50 mm	SET210448		**8458,00**
Mounting frame, black, 70 mm	SET210450		**8656,00**
Aditional option for cast iron dome			
Cast iron dome ⌀ 180 mm	D004186		0,00

+ **Modular accumulator MAS 440 double-layered**	R009042	5	
Cast iron dome MAS ⌀ 180	R009095-01	1	
Mounting ring	10077	1	
Front variants:			
Mounting frame, black, 50 mm	SET210453		**10478,50**
Mounting frame, black, 70 mm	SET210462		**10676,50**
Additional option MAS			
Exchange connectiong piece ⌀ 200 mm	R009105		84,00
Exchange connectiong piece⌀ 160 mm	07137		84,00

Energy efficiency index A +

Eck-Kamin 45/82/48 right side lifting door

Auslaufartikel

Set consists of:	Art.-Nr.	No.	Price
Eck-Kamin 45/82/48 right side lifting door, two-piece ceramic glass		1	
Mounting frame		1	
Chamotte lining set, bright, for Eck-Kamin 45/82/48 right side		1	

Additional options (for all smoke hood variants)			
EAS (see page 11)			2264,00
Reduced price for EAS without display			-214,50
Counterweights for non-self closing door	49097		67,50
Chamotte lining, anthracite	I063019-02		304,50

Smoke hood variants:

Cast iron hot air hood ⌀ 200 mm	R014022-01	1	
Front variants:			
Mounting frame, black, 50 mm	SET210433		**8703,00**
Mounting frame, black, 70 mm	SET210435		**8901,00**
Additional option for cast iron hot air hood			
Cast iron hot air hood ⌀ 250 mm	R014022-02		0,00
Cast iron hot air hood ⌀ 180 mm	R014022-03		0,00

+ **Cast iron hood ⌀ 200 mm**	10087	1	
Front variants:			
Mounting frame, black, 50 mm	SET210423		**8458,00**
Mounting frame, black, 70 mm	SET210425		**8656,00**
Aditional option for cast iron dome			
Cast iron dome ⌀ 180 mm	D004186		0,00

+ **Modular accumulator MAS 440 double-layered**	R009042	5	
Cast iron dome MAS ⌀ 180	R009095-01	1	
Mounting ring	10077	1	
Front variants:			
Mounting frame, black, 50 mm	SET210428		**10478,50**
Mounting frame, black, 70 mm	SET210430		**10676,50**
Additional option MAS			
Exchange connectiong piece ⌀ 200 mm	R009105		84,00
Exchange connectiong piece⌀ 160 mm	07137		84,00

Energy efficiency index A +

Eck-Kamin 57/82/48 right side lifting door

Auslaufartikel

Set consists of:	Art.-Nr.	No.	Price
Eck-Kamin 57/82/48 right side lifting door, two-piece ceramic glass		1	
Mounting frame		1	
Chamotte lining set, bright, for Eck-Kamin 57/82/48 right side		1	

Additional options (for all smoke hood variants)			
EAS (see page 11)			2264,00
Reduced price for EAS without display			-214,50
Counterweights for non-self closing door	49097		67,50
Chamotte lining, anthracite	I013707-02		304,50

Smoke hood variants:

Cast iron hot air hood ⌀ 200 mm	R014022-01	1	
Front variants:			
Mounting frame, black, 50 mm	SET210397		**8909,50**
Mounting frame, black, 70 mm	SET210399		**9106,50**
Additional option for cast iron hot air hood			
Cast iron hot air hood ⌀ 250 mm	R014022-02		0,00
Cast iron hot air hood ⌀ 180 mm	R014022-03		0,00

+ **Cast iron hood ⌀ 200 mm**	10087	1	
Front variants:			
Mounting frame, black, 50 mm	SET210044		**8664,50**
Mounting frame, black, 70 mm	SET210046		**8861,50**
Aditional option for cast iron dome			
Cast iron dome ⌀ 180 mm	D004186		0,00

+ **Modular accumulator MAS 440 double-layered**	R009042	5	
Cast iron dome MAS ⌀ 180	R009095-01	1	
Mounting ring	10077	1	
Front variants:			
Mounting frame, black, 50 mm	SET210049		**10685,00**
Mounting frame, black, 70 mm	SET210051		**10882,50**
Additional option MAS			
Exchange connectiong piece ⌀ 200 mm	R009105		**84,00**
Exchange connectiong piece⌀ 160 mm	07137		**84,00**

Energy efficiency index A +

Eck-Kamin 45/67/44 left side lifting door

Auslaufartikel

Set consists of:	Art.-Nr.	No.	Price
Eck-Kamin 45/67/44 left side lifting door, two-piece ceramic glass		1	
Mounting frame		1	
Chamotte lining set, bright, for Eck-Kamin 45/67/44 left side		1	

Additional options (for all smoke hood variants)			
EAS (see page 11)			2264,00
Reduced price for EAS without display			-214,50
Counterweights for non-self closing door	49097		67,50
Chamotte lining, anthracite	I062062-02		304,50

Smoke hood variants:

Cast iron hot air hood ⌀ 200 mm		R014022-01	1	
Front variants:				
Mounting frame, black, 50 mm		SET210401		**7912,50**
Mounting frame, black, 70 mm		SET210403		**8109,00**
Additional option for cast iron hot air hood				
Cast iron hot air hood ⌀ 250 mm		R014022-02		0,00
Cast iron hot air hood ⌀ 180 mm		R014022-03		0,00

+ **Cast iron hood ⌀ 200 mm**		10087	1	
Front variants:				
Mounting frame, black, 50 mm		SET210314		**7667,50**
Mounting frame, black, 70 mm		SET210316		**7864,00**
Aditional option for cast iron dome				
Cast iron dome ⌀ 180 mm		D004186		0,00

+ **Modular accumulator MAS 440 double-layered**		R009042	5	
Cast iron dome MAS ⌀ 180		R009095-01	1	
Mounting ring		10077	1	
Front variants:				
Mounting frame, black, 50 mm		SET210319		**9688,00**
Mounting frame, black, 70 mm		SET210321		**9884,50**
Additional option MAS				
Exchange connectiong piece ⌀ 200 mm		R009105		84,00
Exchange connectiong piece⌀ 160 mm		07137		84,00

Energy efficiency index A +

Eck-Kamin 45/67/44 right side lifting door

Auslaufartikel

Set consists of:	Art.-Nr.	No.	Price
Eck-Kamin 45/67/44 right side lifting door, two-piece ceramic glass		1	
Mounting frame		1	
Chamotte lining set, bright, for Eck-Kamin 45/67/44 right side		1	

Additional options (for all smoke hood variants)			
EAS (see page 11)			2264,00
Reduced price for EAS without display			-214,50
Counterweights for non-self closing door	49097		67,50
Chamotte lining, anthracite	I062033-02		304,50

Smoke hood variants:

Cast iron hot air hood ⌀ 200 mm	R014022-01	1	
Front variants:			
Mounting frame, black, 50 mm	SET210408		**7912,50**
Mounting frame, black, 70 mm	SET210410		**8109,00**
Additional option for cast iron hot air hood			
Cast iron hot air hood ⌀ 250 mm	R014022-02		0,00
Cast iron hot air hood ⌀ 180 mm	R014022-03		0,00

+ **Cast iron hood ⌀ 200 mm**	10087	1	
Front variants:			
Mounting frame, black, 50 mm	SET210294		**7667,50**
Mounting frame, black, 70 mm	SET210296		**7864,00**
Aditional option for cast iron dome			
Cast iron dome ⌀ 180 mm	D004186		0,00

+ **Modular accumulator MAS 440 double-layered**	R009042	5	
Cast iron dome MAS ⌀ 180	R009095-01	1	
Mounting ring	10077	1	
Front variants:			
Mounting frame, black, 50 mm	SET210299		**9688,00**
Mounting frame, black, 70 mm	SET210301		**9884,50**
Additional option MAS			
Exchange connectiong piece ⌀ 200 mm	R009105		84,00
Exchange connectiong piece⌀ 160 mm	07137		84,00

Energy efficiency index A +

Eck-Kamin 57/67/44 left side lifting door

Auslaufartikel

Set consists of:	Art.-Nr.	No.	Price
Eck-Kamin 57/67/44 left side lifting door, two-piece ceramic glass		1	
Mounting frame		1	
Chamotte lining set, bright, for Eck-Kamin 57/67/44 left side		1	

Additional options (for all smoke hood variants)			
EAS (see page 11)			2264,00
Reduced price for EAS without display			-214,50
Counterweights for non-self closing door	49097		67,50
Chamotte lining, anthracite	I012341-02		304,50

Smoke hood variants:

Cast iron hot air hood ⌀ 200 mm	R014022-01	1	
Front variants:			
Mounting frame, black, 50 mm	SET210382		**8124,50**
Mounting frame, black, 70 mm	SET210384		**8321,50**
Additional option for cast iron hot air hood			
Cast iron hot air hood ⌀ 250 mm	R014022-02		0,00
Cast iron hot air hood ⌀ 180 mm	R014022-03		0,00

+ **Cast iron hood ⌀ 200 mm**	10087	1	
Front variants:			
Mounting frame, black, 50 mm	SET210014		**7879,50**
Mounting frame, black, 70 mm	SET210016		**8076,50**
Aditional option for cast iron dome			
Cast iron dome ⌀ 180 mm	D004186		0,00

+ **Modular accumulator MAS 440 double-layered**	R009042	5	
Cast iron dome MAS ⌀ 180	R009095-01	1	
Mounting ring	10077	1	
Front variants:			
Mounting frame, black, 50 mm	SET210019		**9900,00**
Mounting frame, black, 70 mm	SET210021		**10097,00**
Additional option MAS			
Exchange connectiong piece ⌀ 200 mm	R009105		**84,00**
Exchange connectiong piece⌀ 160 mm	07137		**84,00**

Energy efficiency index A +

Eck-Kamin 57/67/44 right side lifting door

Auslaufartikel

Set consists of:	Art.-Nr.	No.	Price
Eck-Kamin 57/67/44 right side lifting door, two-piece ceramic glass		1	
Mounting frame		1	
Chamotte lining set, bright, for Eck-Kamin 57/67/44 right side		1	

Additional options (for all smoke hood variants)			
EAS (see page 11)			2264,00
Reduced price for EAS without display			-214,50
Counterweights for non-self closing door	49097		67,50
Chamotte lining, anthracite	I012340-02		304,50

Smoke hood variants:

Cast iron hot air hood ⌀ 200 mm	R014022-01	1	
Front variants:			
Mounting frame, black, 50 mm	SET210387		**8124,50**
Mounting frame, black, 70 mm	SET210389		**8321,50**
Additional option for cast iron hot air hood			
Cast iron hot air hood ⌀ 250 mm	R014022-02		0,00
Cast iron hot air hood ⌀ 180 mm	R014022-03		0,00

+ **Cast iron hood ⌀ 200 mm**	10087	1	
Front variants:			
Mounting frame, black, 50 mm	SET210024		**7879,50**
Mounting frame, black, 70 mm	SET210026		**8076,50**
Aditional option for cast iron dome			
Cast iron dome ⌀ 180 mm	D004186		0,00

+ **Modular accumulator MAS 440 double-layered**	R009042	5	
Cast iron dome MAS ⌀ 180	R009095-01	1	
Mounting ring	10077	1	
Front variants:			
Mounting frame, black, 50 mm	SET210029		**9900,00**
Mounting frame, black, 70 mm	SET210031		**10097,00**
Additional option MAS			
Exchange connectiong piece ⌀ 200 mm	R009105		84,00
Exchange connectiong piece⌀ 160 mm	07137		84,00

Energy efficiency index A +

Auslaufartikel

Eck-Kamin 70/33/33 lifting door

Set consists of:	Art.-Nr.	No.	Price
Eck-Kamin 70/33/33 lifting door, two-piece ceramic glass, outlet ⌀ 180 mm		1	
Mounting frame		1	
Chamotte lining set, bright, for Eck-Kamin 70/33/33		1	

Additional options			
EAS (see page 11)			2264,00
Reduced price for EAS without display			-214,50
Counterweights for non-self closing door	49097		67,50
Chamotte lining, anthracite	I065068-02		304,50

Available variants:

Front variants:				
Mounting frame, black, 50 mm		SET210510		**7125,50**
Mounting frame, black, 70 mm		SET210512		**7323,00**

Energy efficiency index A +

Eck-Kamin 42/57/30 left side side-opening door

Auslaufartikel

Set consists of:	Art.-Nr.	No.	Price
Eck-Kamin 42/57/30 left side side-opening door, two-piece ceramic glass, outlet ⌀ 200 mm		1	
Door frame or mounting frame		1	
Chamotte lining set, bright, for Eck-Kamin 42/57/30		1	

Additional options			
EAS (see page 11)			2264,00
Reduced price for EAS without display			-214,50
Chamotte lining, anthracite	I068112-02		304,50
Exchange connectiong piece ⌀ 180 mm	I058043		111,50
Exchange connectiong piece ⌀ 160 mm	I058046		111,50

Available variants:

Front variants:				
Door frame, black		SET212679		**6168,50**
Mounting frame, black 50 mm		SET213036		**6262,00**

Energy efficiency index A +

Eck-Kamin 42/57/30 right side side-opening door

Auslaufartikel

Set consists of:	Art.-Nr.	No.	Price
Eck-Kamin 42/57/30 right side side-opening door, two-piece ceramic glass, outlet ⌀ 200 mm		1	
Door frame or mounting frame		1	
Chamotte lining set, bright, for Eck-Kamin 42/57/30		1	

Additional options			
EAS (see page 11)			2264,00
Reduced price for EAS without display			-214,50
Chamotte lining, anthracite	I068094-02		304,50
Exchange connectiong piece ⌀ 180 mm	I058043		111,50
Exchange connectiong piece ⌀ 160 mm	I058046		111,50

Available variants:

Front variants:				
Door frame, black		SET212677		**6168,50**
Mounting frame, black 50 mm		SET213037		**6262,00**

Energy efficiency index A +

Eck-Kamin 42/57/30 left side lifting door

Auslaufartikel

Set consists of:	Art.-Nr.	No.	Price
Eck-Kamin 42/57/30 left side, two-piece ceramic glass, outlet ⌀ 200 mm		1	
Mounting frame		1	
Chamotte lining set, bright, for Eck-Kamin 42/57/30		1	

Additional options			
EAS (see page 11)			2264,00
Reduced price for EAS without display			-214,50
Chamotte lining, anthracite	I068112-02		304,50
Counterweights for non-self closing door	49097		67,50
Exchange connectiong piece ⌀ 180 mm	I058043		111,50
Exchange connectiong piece ⌀ 160 mm	I058046		111,50

Available variants:

Front variants:				
Mounting frame, black, 50 mm		SET212672		**7549,50**
Mounting frame, black, 70 mm		SET212674		**7746,50**

Energy efficiency index A +

Eck-Kamin 42/57/30 right side lifting door

Auslaufartikel

Set consists of:	Art.-Nr.	No.	Price
Eck-Kamin 42/57/30 right side, two-piece ceramic glass, outlet ⌀ 200 mm		1	
Mounting frame		1	
Chamotte lining set, bright, for Eck-Kamin 42/57/30		1	

Additional options			
EAS (see page 11)			2264,00
Reduced price for EAS without display			-214,50
Chamotte lining, anthracite	I068094-02		304,50
Counterweights for non-self closing door	49097		67,50
Exchange connectiong piece ⌀ 180 mm	I058043		111,50
Exchange connectiong piece ⌀ 160 mm	I058046		111,50

Available variants:

Front variants:				
Mounting frame, black, 50 mm		SET212667		**7549,50**
Mounting frame, black, 70 mm		SET212669		**7746,50**

Energy efficiency index A +

Architektur-Kamin Eck 38/86/36 left side

Auslaufartikel

Set consists of:	Art.-Nr.	No.	Price
Architektur-Kamin Eck 38/86/36 left side, two-piece ceramic glass, outlet ⌀ 200 mm		1	
Mounting frame		1	
Chamotte lining set, bright, for AK-corner 38/86/36		1	

Additional options			
EAS (see page 11)			2264,00
Reduced price for EAS without display			-214,50
Chamotte lining, anthracite	40959.1-02		304,50
Counterweights for non-self closing door	49097		67,50
Smoke pipe adapter for horizontal/vertical outlet	BSK7000-129		588,00
Exchange connectiong piece ⌀ 180 mm	I058043		111,50

Available variants:

Front variants:				
Mounting frame, black, 50 mm		SET205941		**8265,50**
Mounting frame, black, 70 mm		SET208777		**8463,00**

Energy efficiency class A

Architektur-Kamin Eck 38/86/36 right side

Auslaufartikel

Set consists of:	Art.-Nr.	No.	Price
Architektur-Kamin 38/86/36 right side, two-piece ceramic glass, outlet ⌀ 200 mm		1	
Mounting frame		1	
Chamotte lining set, bright, for AK-corner 38/86/36		1	

Additional options			
EAS (see page 11)			2264,00
Reduced price for EAS without display			-214,50
Chamotte lining, anthracite	40959.1-02		304,50
Counterweights for non-self closing door	49097		67,50
Smoke pipe adapter for horizontal/vertical outlet	BSK7000-129		588,00
Exchange connectiong piece ⌀ 180 mm	I058043		111,50

Available variants:

Front variants:				
Mounting frame, black, 50 mm		SET205945		**8265,50**
Mounting frame, black, 70 mm		SET208779		**8463,00**

Energy efficiency class A

Architektur-Kamin Eck 45/101/40 left side

Auslaufartikel

Set consists of:	Art.-Nr.	No.	Price
Architektur-Kamin 45/101/40, left side, two-piece ceramic glass, outlet ⌀ 250 mm		1	
Mounting frame		1	
Chamotte lining set, bright, for AK-corner 45/101/40		1	

Additional options			
Chamotte lining, anthracite	I051069-2		304,50
Counterweights for non-self closing door	49097		67,50
Smoke pipe adapter for horizontal outlet	I019490		433,50
Exchange connectiong piece ⌀ 200 mm	I019449		88,50

Available variants:

Front variants:				
Mounting frame, black, 50 mm		SET207156		**10894,50**
Mounting frame, black, 70 mm		SET208780		**11092,00**

Energy efficiency class A

Architektur-Kamin Eck 45/101/40, right side

Auslaufartikel

Set consists of:	Art.-Nr.	No.	Price
Architektur-Kamin 45/101/40, right side, two-piece ceramic glass, outlet ⌀ 250 mm		1	
Mounting frame		1	
Chamotte lining set, bright, for AK-corner 45/101/40		1	

Additional options			
Chamotte lining, anthracite	I051069-2		304,50
Counterweights for non-self closing door	49097		67,50
Smoke pipe adapter for horizontal outlet	I019490		433,50
Exchange connectiong piece ⌀ 200 mm	I019449		88,50

Available variants:

Front variants:				
Mounting frame, black, 50 mm		SET207160		**10894,50**
Mounting frame, black, 70 mm		SET208781		**11092,00**

Energy efficiency class A

Architektur-Kamin Eck 53/121/50 left side

Auslaufartikel

Set consists of:	Art.-Nr.	No.	Price
Architektur-Kamin 53/121/50 left side, two-piece ceramic glass, outlet ⌀ 250 mm		1	
Mounting frame		1	
Chamotte lining set, bright, for AK-corner 53/121/50		1	

Additional options			
Chamotte lining, anthracite	I008362-02		304,50
Counterweights for non-self closing door	49097		67,50
Smoke pipe adapter for horizontal outlet	I019490		433,50
Exchange connectiong piece⌀ 200 mm	I019449		88,50

Available variants:

Front variants:				
Mounting frame, black, 50 mm		SET205949		**12202,50**
Mounting frame, black, 70 mm		SET208782		**12399,50**

Energy efficiency index A +

Architektur-Kamin Eck 53/121/50 right side

Auslaufartikel

Set consists of:	Art.-Nr.	No.	Price
Architektur-Kamin 53/121/50 right side, two-piece ceramic glass, outlet ⌀ 250 mm		1	
Mounting frame		1	
Chamotte lining set, bright, for AK-corner 53/121/50		1	

Additional options			
Chamotte lining, anthracite	I008324-02		304,50
Counterweights for non-self closing door	49097		67,50
Smoke pipe adapter for horizontal outlet	I019490		433,50
Exchange connectiong piece⌀ 200 mm	I019449		88,50

Available variants:

Front variants:				
Mounting frame, black, 50 mm		SET205953		**12202,50**

Energy efficiency index A +

Panorama-Kamin 42/42/42/42

Set consists of:	Art.-Nr.	No.	Price
Panorama-Kamin 42/42/42/42, outlet ⌀ 200 mm		1	
Chamotte lining set Panorama-Kamin 42/42/42/42		1	

Additional options			
EAS (see page 11)			2264,00
Reduced price for EAS without display			-214,50
Counterweights for non-self closing door	49097		67,50
Exchange connectiong piece ⌀ 180 mm	I058043		111,50
Chamotte lining, anthracite Cast rear panel	I067002-02		304,50
Turnbuckle for suspending of support elements (per insert 2 pieces required)	02567		22,50
Black operating handle (railing and air control)	I007352K		188,50

Available variants:

Front variants:				
Panorama frame, narrow, black		SET210478		**9355,50**
Panorama frame, wide, black		SET210480		**9355,50**

Energy efficiency class A

Panorama-Kamin 51/50/50/50

Set consists of:	Art.-Nr.	No.	Price
Panorama-Kamin 51/50/50/50, outlet ⌀ 200 mm		1	
Combustion chamber lining Panorama-Kamin 51/50/50/50		1	

Additional options			
EAS (see page 11)			2264,00
Reduced price for EAS without display			-214,50
Counterweights for non-self closing door			included/modification
Combustion chamber lining black Cast rear panel	I072006-02		304,50
Catalytic converter Panorama-Kamin	I072078		1052,00
Carrier unit suspended 51/50/50/50	I072083		1047,50
Black operating handle (railing and air control)	I007352K		188,50

Available variants:

Front variants:				
Panorama frame, narrow, black		SET213092		**10917,00**
Panorama frame, wide, black		SET213093		**10917,00**
Additional options				
Exchange connectiong piece ⌀ 180 mm		I058043		**111,50**

+ **Modular accumulator MAS 440 double-layered**		R009042	3	
Cast iron dome MAS ⌀ 200		R009095-02	1	
Mounting ring		10085.1	1	
Front variants:				
Panorama frame, narrow, black		SET213094		**12709,50**
Panorama frame, wide, black		SET213095		**12709,50**

Energy efficiency index A +

Panorama-Kamin 51/66/40/66

Set consists of:	Art.-Nr.	No.	Price
Panorama-Kamin 51/66/40/66, outlet ⌀ 200 mm		1	
Combustion chamber lining Panorama-Kamin 51/66/40/66		1	

Additional options			
EAS (see page 11)			2264,00
Reduced price for EAS without display			-214,50
Counterweights for non-self closing door			included/modification
Exchange connectiong piece ⌀ 180 mm	I058043		111,50
Combustion chamber lining black Cast rear panel	I071009-02		304,50
Carrier unit suspended 51/66/40/66	I071079		1084,00
Black operating handle (railing and air control)	I007352K		188,50

Available variants:

Front variants:				
Panorama frame, narrow, black		SET213100		**11505,00**
Panorama frame, wide, black		SET213101		**11505,00**

Energy efficiency index A +

Panorama-Kamin 51/66/50/66

Set consists of:	Art.-Nr.	No.	Price
Panorama-Kamin 51/66/50/66, outlet ⌀ 200 mm		1	
Combustion chamber lining Panorama-Kamin 51/66/50/66		1	

Additional options			
EAS (see page 11)			2264,00
Reduced price for EAS without display			-214,50
Counterweights for non-self closing door	included/modification		
Exchange connectiong piece ⌀ 180 mm	I019448		88,50
Exchange connectiong piece ⌀ 250 mm	I019450		88,50
Combustion chamber lining black Cast rear panel	I047130-02		304,50
Carrier unit suspended 51/66/50/66	I047172		1119,50
Black operating handle (railing and air control)	I007352K		188,50

Available variants:

Front variants:				
Panorama frame, narrow, black		SET213102		**12183,00**
Panorama frame, wide, black		SET213103		**12183,00**

Energy efficiency index A +

Panorama-Kamin 51/88/50/88

Set consists of:	Art.-Nr.	No.	Price
Panorama-Kamin 51/88/50/88, outlet ⌀ 200 mm		1	
Combustion chamber lining Panorama-Kamin 51/88/50/88		1	

Additional options			
EAS (see page 11)			2264,00
Reduced price for EAS without display			-214,50
Counterweights for non-self closing door	included/modification		
Exchange connectiong piece ⌀ 180 mm	I019448		88,50
Exchange connectiong piece ⌀ 250 mm	I019450		88,50
Combustion chamber lining black Cast rear panel	I048180-02		304,50
Carrier unit suspended 51/88/50/88	I048212		1192,50
Black operating handle (railing and air control)	I007352K		188,50

Available variants:

Front variants:				
Panorama frame, narrow, black		SET213104		**13006,00**
Panorama frame, wide, black		SET213105		**13006,00**

Energy efficiency index A +

Panorama-Kamin 70/25/40/25

Set consists of:	Art.-Nr.	No.	Price
Panorama-Kamin 70/25/40/25, outlet ⌀ 200 mm		1	
Chamotte lining set Panorama-Kamin 70/25/40/25		1	

Additional options			
EAS (see page 11)			2264,00
Reduced price for EAS without display			-214,50
Counterweights for non-self closing door	49097		67,50
Exchange connectiong piece ⌀ 180 mm	I058043		111,50
Chamotte lining, anthracite	I066002-02		304,50
Turnbuckle for suspending of support elements (per insert 2 pieces required)	02567		22,50
Black operating handle (railing and air control)	I007352K		188,50

Available variants:

Front variants:				
Panorama frame, narrow, black		SET210464		**10130,50**
Panorama frame, wide, black		SET210466		**10130,50**

Energy efficiency index A +

Panorama-Kamin 57/25/60/25

Set consists of:	Art.-Nr.	No.	Price
Panorama-Kamin 57/25/60/25, outlet ⌀ 200 mm		1	
Chamotte lining set Panorama-Kamin 57/25/60/25		1	

Additional options			
EAS (see page 11)			2264,00
Reduced price for EAS without display			-214,50
Counterweights for non-self closing door	49097		67,50
Exchange connectiong piece ⌀ 180 mm	I019448		88,50
Exchange connectiong piece ⌀ 250 mm	I019450		88,50
Connection adapter ⌀ 160 mm for changing the combustion air supply from side to rear	BSK5000-130		168,00
Chamotte lining, anthracite	I053034-02		304,50
Smoke pipe adapter for horizontal/vertical outlet inclusive spare connecting piece	I009168		622,00
Turnbuckle for suspending of support elements (per insert 2 pieces required)	02567		22,50
Black operating handle (railing and air control)	I007352K		188,50

Available variants:

Front variants:				
Panorama frame, narrow, black		SET207123		**10014,50**
Panorama frame, wide, black		SET207125		**10014,50**

Energy efficiency index A +

Panorama-Kamin 57/40/60/40

Set consists of:	Art.-Nr.	No.	Price
Panorama-Kamin 57/40/60/40, outlet ⌀ 200 mm		1	
Chamotte lining set Panorama-Kamin 57/40/60/40		1	

Additional options			
EAS (see page 11)			2264,00
Reduced price for EAS without display			-214,50
Counterweights for non-self closing door	49097		67,50
Exchange connectiong piece ⌀ 180 mm	I019448		88,50
Exchange connectiong piece ⌀ 250 mm	I019450		88,50
Connection adapter ⌀ 160 mm for changing the combustion air supply from side to rear	BSK5000-130		168,00
Chamotte lining, anthracite	I007312-02		304,50
Smoke pipe adapter for horizontal/vertical outlet inclusive spare connecting piece	I009168		622,00
Turnbuckle for suspending of support elements (per insert 2 pieces required)	02567		22,50
Black operating handle (railing and air control)	I007352K		188,50

Available variants:

Front variants:				
Panorama frame, narrow, black		SET205987		**10290,00**
Panorama frame, wide, black		SET205989		**10290,00**

Energy efficiency index A +

Panorama-Kamin 57/25/85/25

Set consists of:	Art.-Nr.	No.	Price
Panorama-Kamin 57/25/85/25, outlet ⌀ 200 mm		1	
Chamotte lining set Panorama-Kamin 57/25/85/25		1	

Additional options			
EAS (see page 11)			2264,00
Reduced price for EAS without display			-214,50
Counterweights for non-self closing door	49097		67,50
Exchange connectiong piece ⌀ 180 mm	I019448		88,50
Exchange connectiong piece ⌀ 250 mm	I019450		88,50
Connection adapter ⌀ 160 mm for changing the combustion air supply from side to rear	BSK5000-130		168,00
Chamotte lining, anthracite	I050073-02		304,50
Smoke pipe adapter for horizontal/vertical outlet inclusive spare connecting piece	I009168		622,00
Turnbuckle for suspending of support elements (per insert 2 pieces required)	02567		22,50
Black operating handle (railing and air control)	I007352K		188,50

Available variants:

Available variants:				
Panorama frame, narrow, black		SET206983		**11199,00**
Panorama frame, wide, black		SET206985		**11199,00**

Energy efficiency index A +

Panorama-Kamin 57/40/85/40

Set consists of:	Art.-Nr.	No.	Price
Panorama-Kamin 57/40/85/40, outlet ⌀ 200 mm		1	
Chamotte lining set Panorama-Kamin 57/40/85/40		1	

Additional options			
EAS (see page 11)			2264,00
Reduced price for EAS without display			-214,50
Counterweights for non-self closing door	49097		67,50
Exchange connectiong piece ⌀ 180 mm	I019448		88,50
Exchange connectiong piece ⌀ 250 mm	I019450		88,50
Connection adapter ⌀ 160 mm for changing the combustion air supply from side to rear	BSK5000-130		168,00
Chamotte lining, anthracite	I009149-02		304,50
Smoke pipe adapter for horizontal/vertical outlet inclusive spare connecting piece	I009168		622,00
Turnbuckle for suspending of support elements (per insert 2 pieces required)	02567		22,50
Black operating handle (railing and air control)	I007352K		188,50

Available variants:

Available variants:				
Panorama frame, narrow, black		SET205991		**11601,50**
Panorama frame, wide, black		SET205993		**11601,50**

Energy efficiency class A

Panorama-Kamin 51/25/101/25

Set consists of:	Art.-Nr.	No.	Price
Panorama-Kamin 51/25/101/25, outlet ⌀ 200 mm		1	
Chamotte lining set Panorama-Kamin 51/25/101/25		1	

Additional options			
EAS (see page 11)			2264,00
Reduced price for EAS without display			-214,50
Counterweights for non-self closing door	49097		67,50
Exchange connectiong piece⌀ 180 mm	I019448		88,50
Exchange connectiong piece⌀ 250 mm	I019450		88,50
Connection adapter ⌀ 160 mm for changing the combustion air supply from side to rear	BSK5000-130		168,00
Chamotte lining, anthracite	I054088-02		304,50
Smoke pipe adapter for horizontal/vertical outlet inclusive spare connecting piece	I009168		622,00
Turnbuckle for suspending of support elements (per insert 2 pieces required)	02567		22,50
Black operating handle (railing and air control)	I007352K		188,50

Available variants:

Available variants:				
Panorama frame, narrow, black		SET209336		**12993,50**
Panorama frame, wide, black		SET209338		**12993,50**

Energy efficiency class A

Panorama-Kamin 57/25/121/25

Set consists of:	Art.-Nr.	No.	Price
Panorama-Kamin 57/25/121/25, outlet ⌀ 200 mm		1	
Chamotte lining set Panorama-Kamin 57/25/121/25		1	

Additional options			
EAS (see page 11)			2264,00
Reduced price for EAS without display			-214,50
Counterweights for non-self closing door	49097		67,50
Exchange connectiong piece ⌀ 180 mm	I019448		88,50
Exchange connectiong piece ⌀ 250 mm	I019450		88,50
Connection adapter ⌀ 160 mm for changing the combustion air supply from side to rear	BSK5000-130		168,00
Chamotte lining, anthracite	I055066-02		304,50
Smoke pipe adapter for horizontal/vertical outlet inclusive spare connecting piece	I009168		622,00
Turnbuckle for suspending of support elements (per insert 2 pieces required)	02567		22,50
Black operating handle (railing and air control)	I007352K		188,50

Available variants:

Available variants:				
Panorama frame, narrow, black		SET209340		**14420,50**
Panorama frame, wide, black		SET209342		**14420,50**

Energy efficiency class A

Panorama-Kamin s-fire 42/42/66/42

Set consists of:	Art.-Nr.	No.	Price
Panorama-Kamin **s-fire 42/42/66/42**, outlet ⌀ 200 mm		1	
Combustion chamber lining black Panorama-Kamin 42/42/66/42		1	
Counterweights for non-self closing door		1	

Additional options			
Exchange connectiong piece ⌀ 180 mm	I058043		111,50
Exchange connectiong piece ⌀ 150 mm	I070092		111,50
Turnbuckle for suspending of support elements (per insert 2 pieces required)	02567		22,50

Available variants:

Front variants:				
Panorama frame, wide, black		I070001-01		**9623,00**
Panorama frame, wide, stainless steel		I070001-02		**10125,50**

Accessories

Support frame

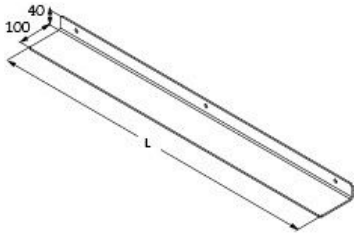

Article description	Art.-Nr.	Retail price
Mounting bracket flat KK Standard flat side-opening/lifting doors	49099	211,00

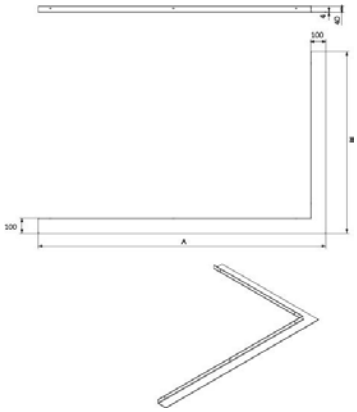

Article description	Art.-Nr.	Retail price
Mounting brackets Eck-Kamin + Architektur-corners		
xx/52/52 lifting door/side opening door	49150	352,50
57/67/44 r/l	49152	393,50
57/82/48 r/l	49152	393,50
Architektur-Eck left side 53/121/50 + 45/101/40	49157	486,50
Architektur-Eck right side 53/121/50 + 45/101/40	49158	486,50

Article description	Art.-Nr.	Retail price
Flexible hose		
⌀ 125 mm for external air connection	49202	103,50
⌀ 160 mm for external air connection	49203	126,00

Article description	Art.-Nr.	Retail price
Damper flaps		
Damper flap ⌀ 180 mm	02459	196,50
Damper flap ⌀ 200 mm	02460	214,00
Damper flap ⌀ 250 mm	02461	229,00
Damper flap ⌀ 300 mm	02462	254,00

Article description	Art.-Nr.	Retail price
Modern style handle for damper flaps / smoke valves, with shaft	10275	210,50
Recessed handle for damper flaps / smoke valves, with shaft	900296	240,00
Bediengriff rustikal for damper flaps / smoke valves, with shaft	10274	193,00

Recessed handle

Sissi flap

(suitable for Eck 53/121/50, Tunnel 53/121, Tunnel 53/135, Tunnel 53/166 and the Panorama variants except Panorama 42/42/42/42, 70/25/40/25 und 51/66/40/66)

Article description	Art.-Nr.	Retail price
Sissi flap* for smoke pipe⌀ 180 mm	209300K	710,00
Sissi flap* for smoke pipe⌀ 200 mm	209301K	747,00
Sissi flap* for smoke pipe⌀ 250 mm	209302k	802,00

Sissi flap

(suitable for all other fireplaces with connecting piece dia. = 125 mm)

Article description	Art.-Nr.	Retail price
Sissi flap* for smoke pipe⌀ 180 mm	209300KA	855,00
Sissi flap* for smoke pipe⌀ 200 mm	209301KA	892,50
Sissi flap* for smoke pipe⌀ 250 mm	209302KA	945,50

* consists of additional air supply Z130, fixtures for additional air supply assembly (in D = 180 mm, D = 200 mm or D = 250mm), T-piece (in D = 180 mm, D = 200 mm or D = 250 mm), adjustable clamps 150–170 (2 pcs.), adapter 160/125 mm (only for fireplaces with combustion air supply connection D = 125 mm; Art. No. 209300KA, 209301KA or 209302KA)

For all aforementioned variants, the stainless steel pipe must be ordered separately, specifying the required length.

Article description	Art.-Nr.	Retail price
Round stainless steel hose dia. = 160 mm (according to DIN 4102-A1) for Sissi flap/by metre **ATTENTION: max. up to 5 metres available**	900094	63,00

Schematic drawing

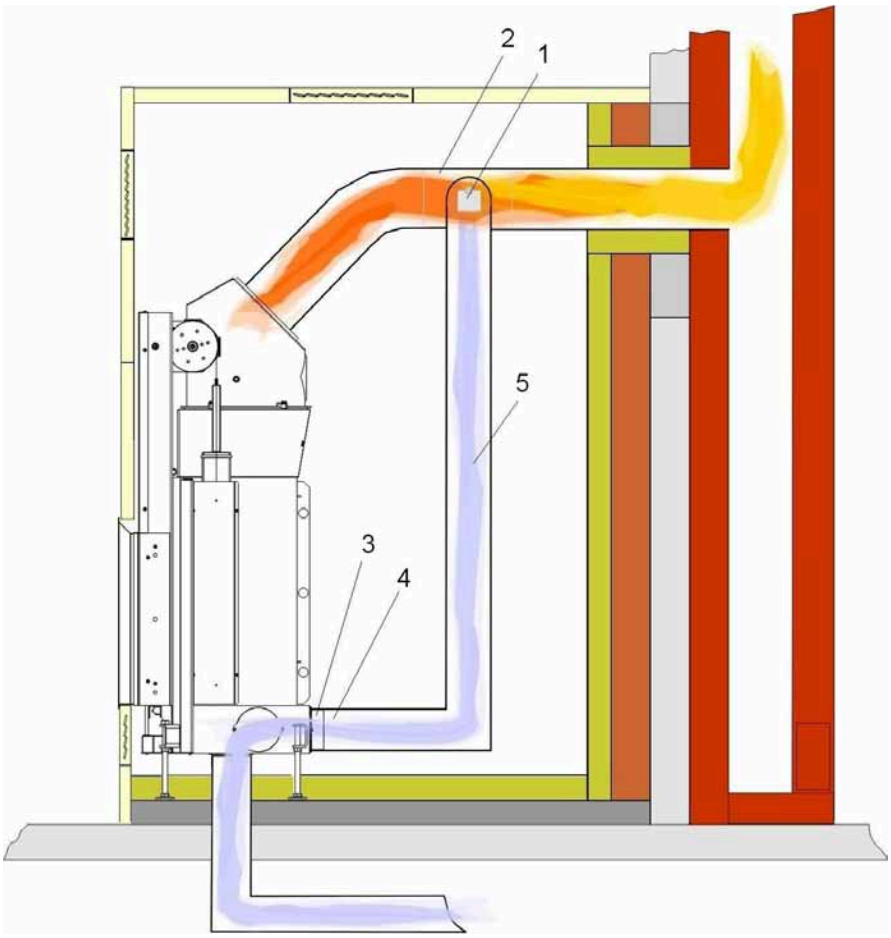

1	Supplementary air supply with assembly kit and adjustable clamp
2	T-piece
3	Combustion air connection ⌀ 125 mm or ⌀ 160 mm with clamp
4	Adapter 160/125
5	Round stainless steel hose ⌀ 160 mm

The Formats

flat

from page 100

Urfeuer- open fireplace
50/66
Urfeuer-Kitchen- Fireplace®
50/66

Urfeuer- open fireplace
50/88

Urfeuer- open fireplace
50/110

Door dimensions height x width in cm

Eck corners

from page 104

Urfeuer- open fireplace
Eck
50/88/44

Door dimensions height x width x width in cm

Panorama formats

from page 106

Urfeuer- open fireplace
Panorama
50/44/66/44

Urfeuer- open fireplace Panorama
50/44/88/44

Door dimensions height x side width x front width x side width in cm

4free

from page 108

Urfeuer- open fireplace
4free70

Variants for firing chamber extention

Urfeuer flach

mit Anbaurahmen für Feuerraumfortführung (beige) und modularem Aufbau der Feuerraumfortführung L/R (rot/rosa)

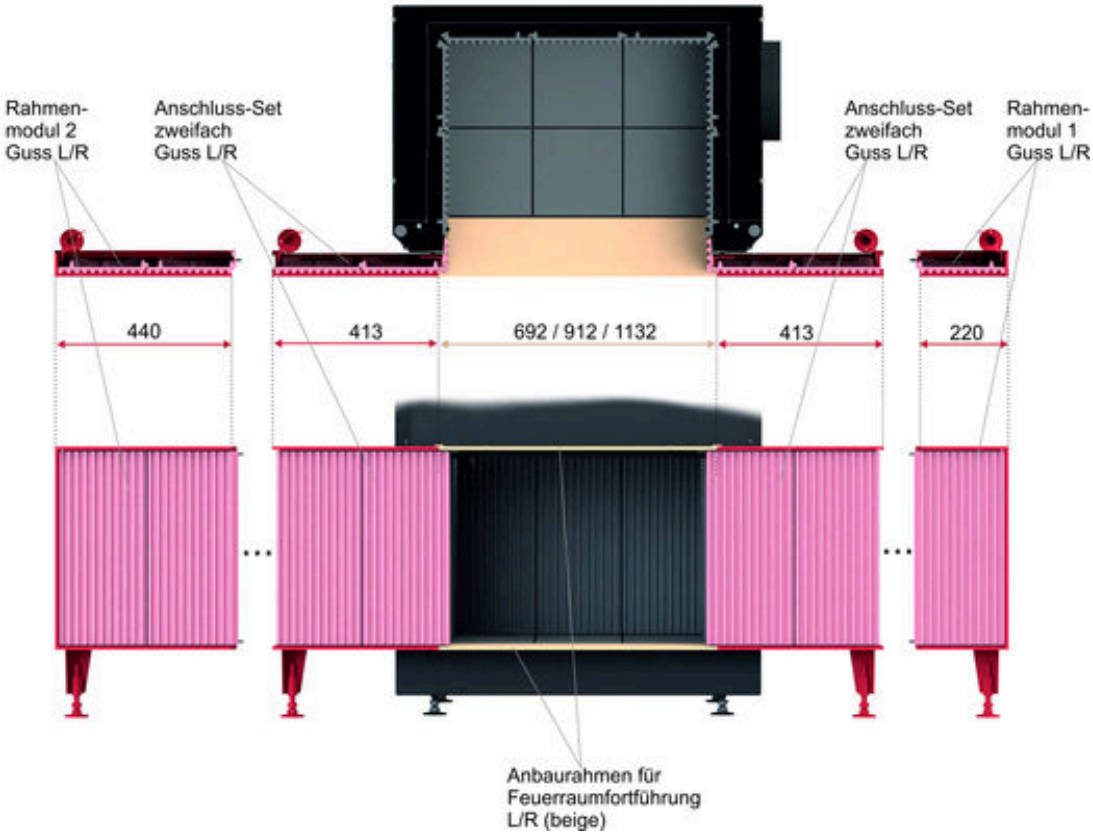

Urfeuer Eck

mit Anbaurahmen für Feuerraumfortführung (beige) und modularem Aufbau der Feuerraumfortführung L/R unter 0° und 90° (rot/rosa)

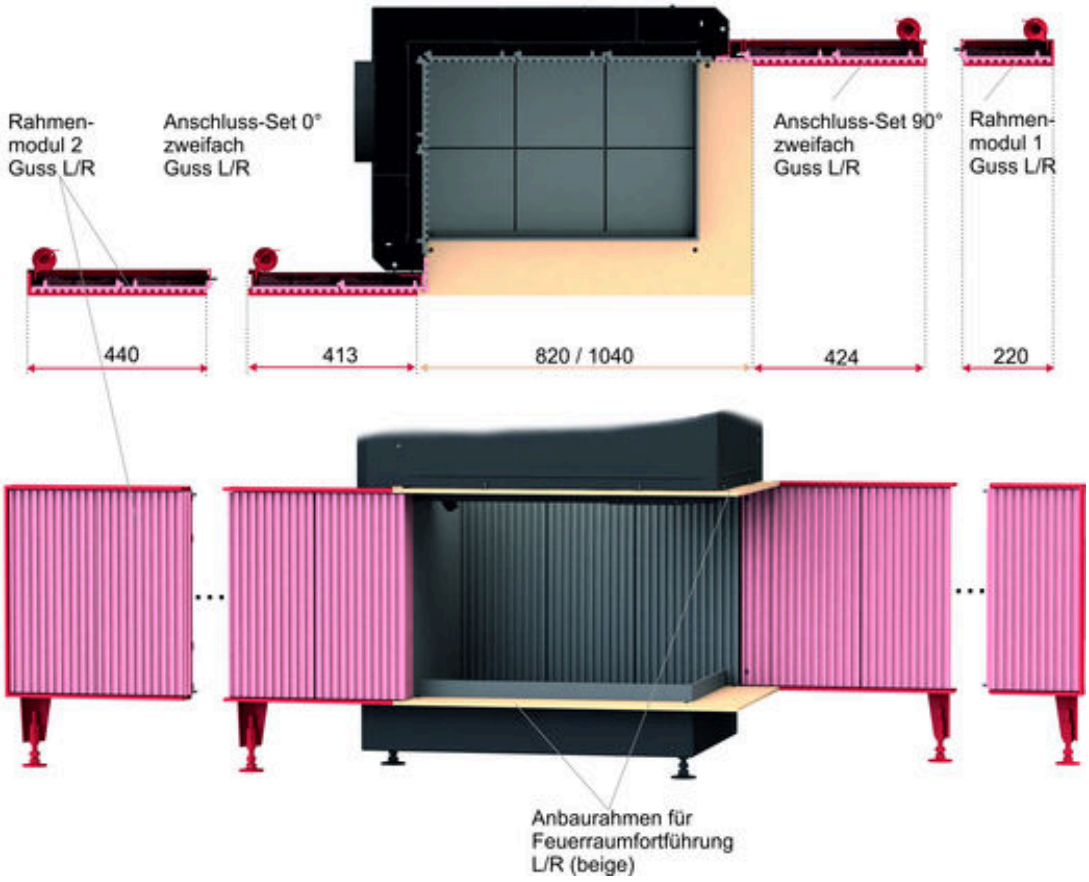

Urfeuer Panorama

mit Anbaurahmen für Feuerraumfortführung (beige) und
modularem Aufbau der Feuerraumfortführung L/R unter 0° und 90° (rot/rosa)

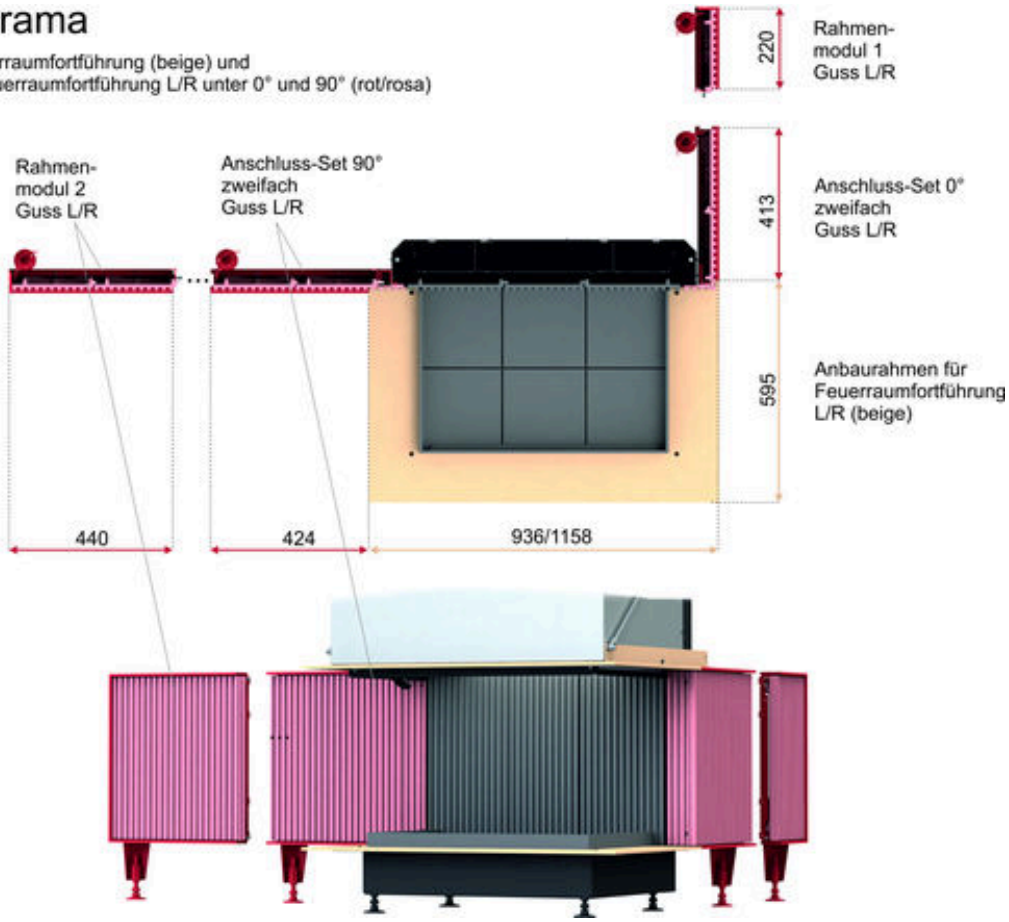

Urfeuer- open fireplace 50/66

Set consists of:	Art.-Nr.	No.	Price
Urfeuer- open fireplace 50/66 outlet ⌀ 300 mm		1	
Mounting frame		1	
Combustion chamber inner lining cast iron		1	

Additional options			
Spare connecting piece ⌀ 250 mm	D015042		152,50

Available variants:

Front variants:				
Mounting frame, black, 60 mm		SET212690		**9551,00**
Mounting frame, black, 60 mm L/R 2		SET212693		**10767,50**
Mounting frame, black, 60 mm L2/ R2		SET212695		**11806,50**

Options for the extention of the firing chamber			
Frame module 1 piece	D020006-01		788,00
Frame module double	D021006-01		932,50

Overview of firing chamber extention (see page 98)
Accessories (see page 110)

Energy efficiency index F

Urfeuer-Kitchen- Fireplace® 50/66

Set consists of:	Art.-Nr.	No.	Price
Urfeuer-Kitchen- Fireplace® 50/66 outlet ⌀ 300 mm		1	
Mounting frame		1	
Combustion chamber inner lining cast iron		1	
Interior lighting combustion chamber		1	
Grill support with new grill grate made of cast iron		1	

Additional options			
Knifeblock set **consisting of**: Knife block Meat fork 2 x Cooking knife 1 x Utility knife 1 x	SET212773		921,00
Grill drip tray	N006062		322,00
Double-enamelled cast iron oven-pan	K011151		196,00
Spare connecting piece ⌀ 250 mm	D015042		152,50

Available variants:

Front variants:				
Mounting frame, black, 60 mm		SET212722		**13939,00**
Mounting frame, black, 60 mm L/R 2		SET212724		**15155,50**
Mounting frame, black, 60 mm L2/ R2		SET212726		**16194,50**
Functional niche black for kitchen-fire-place Urfeuer		SET212932		**14954,50**

Options for the extention of the firing chamber			
Frame module 1 piece	D020006-01		788,00
Frame module double	D021006-01		932,50

Overview of firing chamber extention (see page 98)
Accessories (see page 110)

Energy efficiency index F

Urfeuer- open fireplace 50/88

Set consists of:	Art.-Nr.	No.	Price
Urfeuer- open fireplace 50/88 outlet ⌀ 300 mm		1	
Mounting frame		1	
Combustion chamber inner lining cast iron		1	

Available variants:

Front variants:				
Mounting frame, black, 60 mm		SET212685		**10146,50**
Mounting frame, black, 60 mm L/R 2		SET212686		**11375,50**
Mounting frame, black, 60 mm L2/ R2		SET212688		**12414,00**

Options for the extention of the firing chamber			
Frame module 1 piece	D020006-01		788,00
Frame module double	D021006-01		932,50

Overview of firing chamber extention (see page 98)
Accessories (see page 110)

Energy efficiency index F

Urfeuer- open fireplace 50/110

Set consists of:	Art.-Nr.	No.	Price
Urfeuer- open fireplace 50/110 outlet ⌀ 300 mm		1	
Mounting frame		1	
Combustion chamber inner lining cast iron		1	

Available variants:

Front variants:				
Mounting frame, black, 60 mm		SET212728		**11200,00**
Mounting frame, black, 60 mm L/R 2		SET212729		**12434,50**
Mounting frame, black, 60 mm L2/ R2		SET212731		**13473,50**

Options for the extention of the firing chamber			
Frame module 1 piece	D020006-01		788,00
Frame module double	D021006-01		932,50

Overview of firing chamber extention (see page 98)
Accessories (see page 110)

Energy efficiency index F

Urfeuer- open fireplace Eck 50/88/44 L

Set consists of:	Art.-Nr.	No.	Price
Urfeuer- open fireplace Eck 50/88/44 L outlet ⌀ 300 mm		1	
Mounting frame		1	
Combustion chamber inner lining cast iron		1	

Available variants:

Front variants:				
Mounting frame, black, 60 mm		SET212754		**11704,50**
Mounting frame, black, 60 mm L2,90°		SET212755		**12819,50**
Mounting frame, black, 60 mm L2,0°		SET212756		**12743,50**
Mounting frame, black, 60 mm L2,90°/ R2,0°		SET212757		**13858,50**
Mounting frame, black, 60 mm L2,0°/R2,0°		SET212758		**13782,50**
Mounting frame, black, 60 mm L2,90°/ L2,90°		SET212759		**13934,50**

Options for the extention of the firing chamber			
Frame module 1 piece	D020006-01		788,00
Frame module double	D021006-01		932,50

Overview of firing chamber extention (see page 98)
Accessories (see page 110)

Energy efficiency index F

Urfeuer- open fireplace Eck 50/88/44 R

Set consists of:	Art.-Nr.	No.	Price
Urfeuer- open fireplace Eck 50/88/44 R outlet ⌀ 300 mm		1	
Mounting frame		1	
Combustion chamber inner lining cast iron		1	

Available variants:

Front variants:				
Mounting frame, black, 60 mm		SET212760		**11704,50**
Mounting frame, black, 60 mm R2,90°		SET212761		**12819,50**
Mounting frame, black, 60 mm R2,0°		SET212762		**12743,50**
Mounting frame, black, 60 mm R2,90°/ L2,0°		SET212763		**13858,50**
Mounting frame, black, 60 mm R2,0°/L2,0°		SET212764		**13782,50**
Mounting frame, black, 60 mm R2,90°/ L2,90°		SET212765		**13934,50**

Options for the extention of the firing chamber			
Frame module 1 piece	D020006-01		788,00
Frame module double	D021006-01		932,50

Overview of firing chamber extention (see page 98)
Accessories (see page 110)

Energy efficiency index F

Urfeuer- open fireplace Panorama 50/44/66/44

Set consists of:	Art.-Nr.	No.	Price
Urfeuer- open fireplace Panorama 50/44/66/44 outlet ⌀ 300 mm		1	
Mounting frame		1	
Combustion chamber inner lining cast iron		1	

Additional options			
Glass panel with bracket for smoke protection	D024054		209,00

Available variants:

Front variants:				
Mounting frame, black, 60 mm		SET212707		**10741,00**
Mounting frame, black, 60 mm R2,90°/ L2,90°		SET212766		**12971,00**
Mounting frame, black, 60 mm R2,0°/L2,0°		SET212767		**12818,50**

Options for the extention of the firing chamber			
Frame module 1 piece	D020006-01		788,00
Frame module double	D021006-01		932,50

Overview of firing chamber extention (see page 98)
Accessories (see page 110)

Energy efficiency index F

Urfeuer- open fireplace Panorama 50/44/88/44

Set consists of:	Art.-Nr.	No.	Price
Urfeuer- open fireplace Panorama 50/44/88/44 outlet ⌀ 300 mm		1	
Mounting frame		1	
Combustion chamber inner lining cast iron		1	

Additional options			
Glass panel with bracket for smoke protection	D024054		209,00

Available variants:

Front variants:				
Mounting frame, black, 60 mm		SET212768		**11648,50**
Mounting frame, black, 60 mm L2,90°/ R2,90°		SET212769		**13878,50**
Mounting frame, black, 60 mm L2,0°/R2,0°		SET212770		**13726,50**

Options for the extention of the firing chamber			
Frame module 1 piece	D020006-01		788,00
Frame module double	D021006-01		932,50

Overview of firing chamber extention (see page 98)
Accessories (see page 110)

Energy efficiency index F

Urfeuer- open fireplace 4free70

Set consists of:	Art.-Nr.	No.	Price
Urfeuer- open fireplace 4free70 outlet ⌀ 350 mm		1	

Available variants:

Available variants:			
Urfeuer 4free70	D027001		**11631,00**

Additional options			
Fire table 4free70 wide 1128 x 1128 mm	D027124		1110,00
Fire table 4free70 narrow 888 x 888 mm	D027125		751,00
Combustion air connection lower	D027067		343,50
Smoke protection made of glass height 475 mm	D027141		507,50
Extention of ceiling retainer	D027100		1033,00
Smoke pipe ⌀ 350, L=1000	S002050		235,00

Accessories (see page 110)

Energy efficiency index F

Accessories

Article description	Art.-Nr.	Retail price
Combustion air flap		
Single flap ⌀ 250 mm for manual operation	N003055-01	547,50
Double flap ⌀ 250 mm for manual operation with external grate	N003085-01	834,50
Single flap ⌀ 250 mm motorized	N003055-02	1119,50
Double flap ⌀ 250 mm motorized with external grate	N003085-02	1590,50
Dumper flaps		
Electrical damper flap ⌀ 250 mm	E010032	939,00
Electrical damper flap ⌀ 300 mm	E010033	939,00
Motor for electrical damper flap 4free70 (damper flap is included in delivery content of 4free70)	E010035	723,50

Article description	Art.-Nr.	Retail price
Spare connecting piece ⌀ 250 mm suitable for Urfeuer 50/66	D015042	152,50

Article description	Art.-Nr.	Retail price
Modern style handle for damper flaps / smoke valves, with shaft	10275	210,50
Recessed handle for damper flaps / smoke valves, with shaft	900296	240,00

Recessed handle

Article description	Art.-Nr.	Retail price
Flexible hose ⌀ 250 mm for external air connection	N003104	148,50

Article description	Art.-Nr.	Retail price
Fireclaw with blowpipe and brass mouthpiece	902005	432,00

Glazing formats

Flat glazing

from page 116

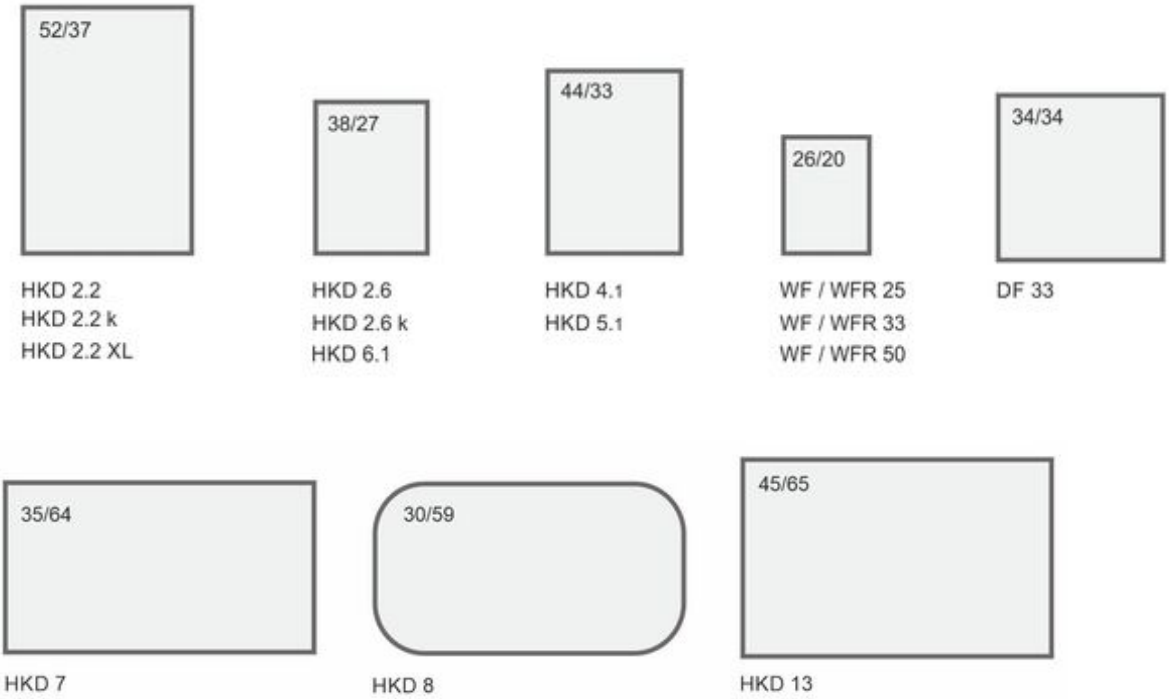

Door dimensions height x width in cm

Tunnel formats

from page 144

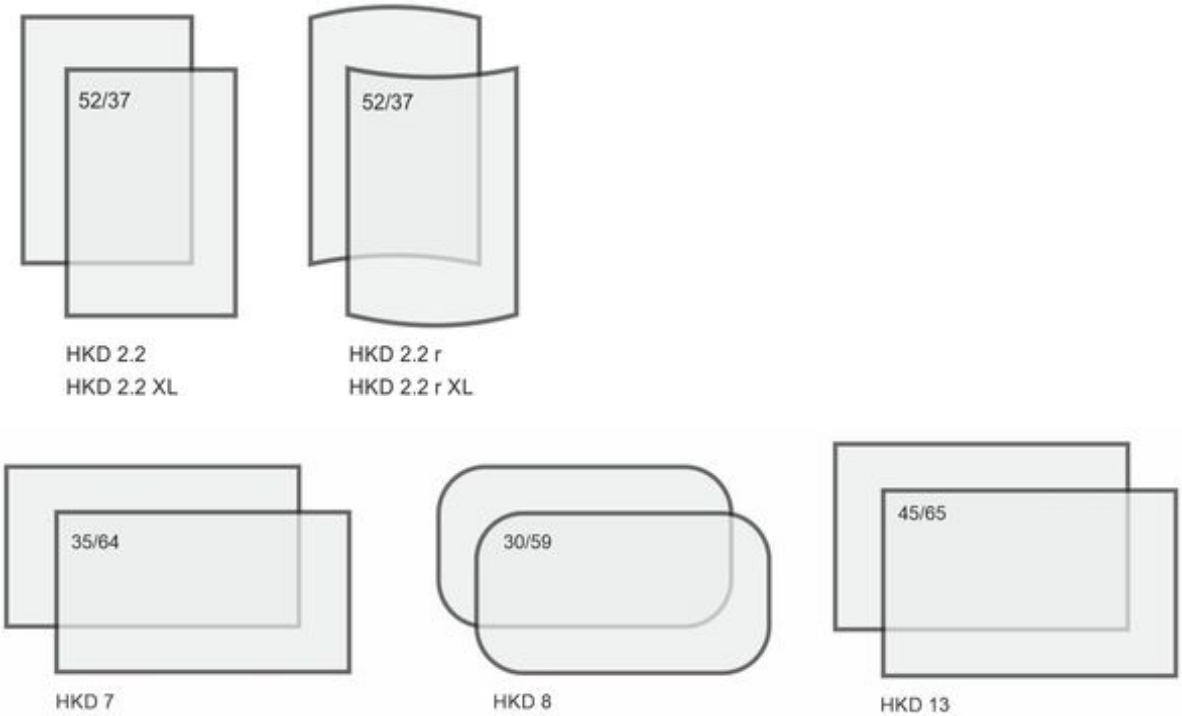

Door dimensions height x width in cm

Round glazing

from page 156

HKD 2.2 r
HKD 2.2 r k
HKD 2.2 r XL

Door dimensions height x width in cm

Eck corners

from page 160

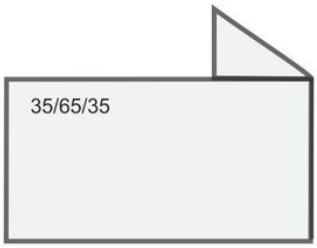

HKD 11

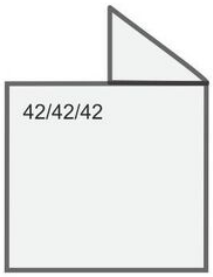

HKD 12

Door dimensions height x width x width in cm

Door frame - mounting frame - Tiled stove inserts

Door frame

Mounting frame

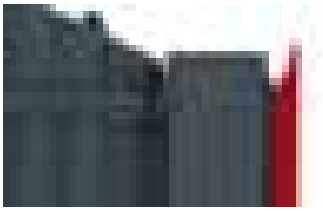
Cast iron frame

Steel front plate
42 x 79 cm

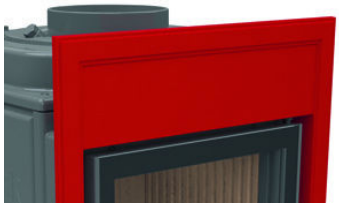
Cast iron front plate
42 x 79 cm

Steel front plate
48 x 83 cm

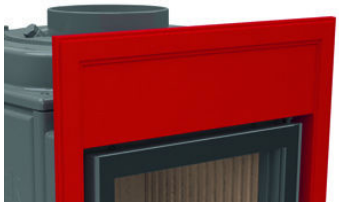
Cast iron front plate
48 x 83 cm

Door frame
R = 330

Mounting frame
R = 380

Supplementary equipment

EAS Combustion controls with potential-free relay (without additional functions) consisting of display, 1 x flush-mount box, door switch, thermocouple & bus line, each 2 m long. Preassembled EAS/EOS components, door switch, thermocouple, motor box with transmission and ø 125 mm air flap, flexible hose with adjustable clamps

EOS Combustion control with graphic touchscreen display and additional functions (differential temperature control, Moritz's flap control) consisting of: Display with control unit, 2 x flush-mount box, door switch, thermocouple, bus and connecting line, each 2 m long, 4 x water sensors with immersion sleeve and 2x extension cable 3 m. Preassembled EOS components: door switch, thermocouple, motor box with transmission and ø 125 mm air flap, flexible hose with adjustable clamps

flat	Tunnel	round	Eck

DF 33 double glazing for connection of a storage mass on site

Set consists of:	Art.-Nr.	No.	Price
DF 33, double glazing		1	
Combustion chamber lining DF 33		1	
Adapter MSS / for on-site connection of a storage mass DF 33		1	

Additional options			
EAS (see page 114)			2264,00
Reduced price for EAS without display			-214,50
The EAS must be taken into account when ordering. Subsequent conversion / retrofitting is no longer possible.			
Doors with self-closing are not available!			
Motorised rotating function			2581,00
Turnbuckle for suspending of support elements (per insert 2 pieces required)	02567		22,50
Socle frame basic element	D028200		1052,00

Available variants

Niche cladding 01	SET213024		**10532,00**

Energy efficiency index A +

DF 33 double glazing with GNF 8

Set consists of:	Art.-Nr.	No.	Price
DF 33, double glazing		1	
Combustion chamber lining DF 33		1	
MSS adapter / direct connection DF 33		1	
GNF 8 without connecting pieces		1	
GNF 8 Connecting piece, inlet ⌀ 180		1	
GNF 8 Connecting piece, outlet ⌀ 160		1	
Support bearing GNF 8		1	
MSS base plate 100		2	
Heat protective panel GNF 8		1	

Additional options			
EAS (see page 114)			2264,00
Reduced price for EAS without display			-214,50
The EAS must be taken into account when ordering. Subsequent conversion / retrofitting is no longer possible.			
Doors with self-closing are not available!			
Motorised rotating function			2581,00
Turnbuckle for suspending of support elements (per insert 2 pieces required)	02567		22,50
Socle frame basic element	D028200		1052,00

The flue gas pipes for connection to GNF 8 and MSS must be purchased on site

Available variants

Niche cladding 01	SET213033		**12387,50**

Energy efficiency index A +

DF 33 double glazing with Modular Accumulator MAS

Set consists of:	Art.-Nr.	No.	Price
DF 33, double glazing		1	
Combustion chamber lining DF 33		1	
Adapter MAS DF 33		1	
Mounting ring MAS		1	
MAS 440 accumulation stone double-layered		5	
Cast iron dome MAS		1	

Additional options			
EAS (see page 114)			2264,00
Reduced price for EAS without display			-214,50
The EAS must be taken into account when ordering. Subsequent conversion / retrofitting is no longer possible.			
Doors with self-closing are not available!			
Motorised rotating function			2581,00
Turnbuckle for suspending of support elements (per insert 2 pieces required)	02567		22,50
Socle frame basic element	D028200		1052,00

Available variants

Niche cladding 01	SET213027		**12948,00**

Energy efficiency index A +

DF 33 double glazing with MSS

Set consists of:	Art.-Nr.	No.	Price
DF 33, double glazing		1	
Combustion chamber lining DF 33		1	
MSS adapter / direct connection DF 33		1	
MSS heat storage module 20 cm MAS		2	
MSS elbow 90°		2	
MSS inlet block ø 180, double-layered		1	
MSSI insulating block 30x30 cm		2	
MSS base plate 75		4	
MSS outlet block ⌀180		1	
MSS steel tape ring		7	
MSS bypass 40 with sealings		1	
MSS heat storage module 20 cm with opening		2	
MSS glue Thermofix 1000 1 kg		1	

Additional options			
EAS (see page 114)			2264,00
Reduced price for EAS without display			-214,50
The EAS must be taken into account when ordering. Subsequent conversion / retrofitting is no longer possible.			
Doors with self-closing are not available!			
Motorised rotating function			2581,00
Turnbuckle for suspending of support elements (per insert 2 pieces required)	02567		22,50
Socle frame basic element	D028200		1052,00

The flue gas pipes for connection to GNF 8 and MSS must be purchased on site

Available variants

Niche cladding 01	SET213030		**12091,50**

Energy efficiency index A +

HKD 2.2 side-opening door flat glass

DHT middle

Set consists of:	Art.-Nr.	No.	Price
HKD 2.2 DF, single glazing		1	
Door frame or mounting frame		1	
Upper lining for HKD 2.2		1	
Inner lining set for HKD 2.2		1	
Support bearing HKD 2.2		1	

Additional options (for all smoke hood variants)			
EAS (see page 114)			2264,00
Reduced price for EAS without display			-214,50
Additional door DHT middle			1689,50
EAS at DHT			2474,50
Revision handle	02429		101,50
Double glazing			232,00
Door handle black	02056-01		130,50

Smoke hood variants:

+ **Cast iron dome ⌀ 180 mm**		D009363	1	
Front variants:				
Door frame, black		SET208453		**5648,50**
Door frame, stainless steel		SET208454		**5715,00**
Mounting frame, black		SET208455		**5795,00**
Mounting frame, stainless steel		SET208457		**5954,50**
Steel front plate 48 x 83 cm		SET208459		**5837,00**
Cast iron front plate 48 x 83 cm		SET208460		**5800,00**

+ **Cast iron cover ⌀ 180 mm and cast iron heat exchanger rings**		R015006-02	2	
Front variants:				
Door frame, black		SET213327		**7167,50**
Door frame, stainless steel		SET213328		**7234,00**
Mounting frame, black		SET213329		**7314,00**
Mounting frame, stainless steel		SET213330		**7473,50**
Steel front plate 48 x 83 cm		SET213331		**7356,00**
Cast iron front plate 48 x 83 cm		SET213332		**7319,00**
Alternative article: connection piece eccentric instead of cast iron dome				
Connection piece eccentric ⌀ 180 mm		S003024		-206,00
Connection piece eccentric ⌀ 200 mm		S003025		-206,00
Additional options				
90° bend - dumper flap and cleaning ⌀ 180 mm		S002198		**306,00**
90° bend - dumper flap and cleaning ⌀ 200 mm		S002208		**329,00**

+ **Cast iron dome ⌀ 180 mm low**		D003664	1	
Front variants:				
Door frame, black		SET212881		**5949,50**
Door frame, stainless steel		SET212882		**6016,00**
Mounting frame, black		SET212883		**6096,00**
Mounting frame, stainless steel		SET212884		**6255,50**
Steel front plate 48 x 83 cm		SET212886		**6138,00**
Cast iron front plate 48 x 83 cm		SET212887		**6101,00**

+ **Modular accumulator MAS 440 double-layered**		R009042	5	
Cast iron dome MAS ⌀ 180		R009095-01	1	
Mounting ring		10077	1	
Front variants:				
Door frame, black		SET212825		**7606,00**
Door frame, stainless steel		SET212826		**7672,50**
Mounting frame, black		SET212827		**7752,50**
Mounting frame, stainless steel		SET212828		**7912,00**
Steel front plate 48 x 83 cm		SET212830		**7794,50**
Cast iron front plate 48 x 83 cm		SET212831		**7757,50**
Additional option MAS				
Exchange connectiong piece ⌀ 200 mm		R009105		84,00
Exchange connectiong piece⌀ 160 mm		07137		84,00

Energy efficiency index A +

HKD 2.2 k side-opening door flat glass

Set consists of:	Art.-Nr.	No.	Price
HKD 2.2 k DF, single glazing		1	
Door frame or mounting frame		1	
Inner lining set for HKD 2.2 k		1	
Upper lining for HKD 2.2 k		1	
Support bearing HKD 2.2 k		1	

Additional options			
EAS (see page 114)			2264,00
Reduced price for EAS without display			-214,50
Double glazing			232,00
Door handle black	02056-01		130,50
MAS (see page 342)			

Available variants:

Front variants:				
Door frame, black		SET208497		**5537,50**
Door frame, stainless steel		SET208498		**5604,50**
Mounting frame, black		SET208499		**5684,00**
Mounting frame, stainless steel		SET208500		**5843,50**
Steel front plate 48 x 83 cm		SET208502		**5726,00**
Cast iron front plate 48 x 83 cm		SET208503		**5689,00**

Energy efficiency index A +

HKD 2.2 XL side-opening door flat glass

Set consists of:	Art.-Nr.	No.	Price
HKD 2.2 XL DF, single glazing		1	
Door frame or mounting frame		1	
Inner lining set for HKD 2.2 XL		1	
Upper lining for HKD 2.2 XL		1	
Support bearing HKD 2.2 XL		1	

Additional options			
EAS (see page 114)			2264,00
Reduced price for EAS without display			-214,50
Additional door DHT middle			1689,50
EAS at DHT			2474,50
Revision handle	02429		101,50
Double glazing			232,00
Door handle black	02056-01		130,50

Smoke hood variants:

+ **Cast iron dome ⌀ 180 mm**		D009363	1	
Front variants:				
Door frame, black		SET208214		**6456,00**
Door frame, stainless steel		SET208215		**6523,00**
Mounting frame, black		SET208216		**6602,50**
Mounting frame, stainless steel		SET208217		**6762,00**
Steel front plate 48 x 83 cm		SET208268		**6644,50**
Cast iron front plate 48 x 83 cm		SET208269		**6607,50**

+ **Cast iron dome ⌀ 180 mm low**		D003664	1	
Front variants:				
Door frame, black		SET212893		**6757,00**
Door frame, stainless steel		SET212894		**6823,50**
Mounting frame, black		SET212895		**6903,50**
Mounting frame, stainless steel		SET212896		**7063,00**
Steel front plate 48 x 83 cm		SET212898		**6945,50**
Cast iron front plate 48 x 83 cm		SET212899		**6908,50**

Energy efficiency index A +

HKD 2.6 side-opening door flat glass

Set consists of:	Art.-Nr.	No.	Price
HKD 2.6 DF, Double glazing		1	
Door frame or mounting frame, front plate		1	
Upper lining for HKD 2.6		1	
Inner lining set for HKD 2.6		1	
Support bearing HKD 2.6		1	

Additional options (for all smoke hood variants)			
EAS (see page 114)			2264,00
Reduced price for EAS without display			-214,50
Door handle black	02056-01		130,50

Smoke hood variants:

+ **Cast iron dome ⌀ 180 mm**		D009363	1	
Front variants:				
Door frame, black		SET208513		**5741,50**
Cast iron frame black		SET208515		**5761,00**

+ **Cast iron cover ⌀ 180 mm and cast iron heat exchanger rings**		R015006-02	2	
Front variants:				
Door frame, black		SET213333		**7260,00**
Cast iron frame black		SET213334		**7279,50**
Alternative article: connection piece eccentric instead of cast iron dome				
Connection piece eccentric ⌀ 180 mm		S003024		-206,00
Connection piece eccentric ⌀ 200 mm		S003025		-206,00
Additional options				
90° bend - dumper flap and cleaning ⌀ 180 mm		S002198		**306,00**
90° bend - dumper flap and cleaning ⌀ 200 mm		S002208		**329,00**

+ **Cast iron dome ⌀ 180 mm low**		D003664	1	
Front variants:				
Door frame, black		SET212924		**6042,00**
Cast iron frame black		SET212926		**6061,50**

+ **Modular accumulator MAS 440 double-layered**		R009042	5	
Cast iron dome MAS ⌀ 180		R009095-01	1	
Mounting ring		10077	1	
Front variants:				
Door frame, black		SET212928		**7699,00**
Cast iron frame black		SET212930		**7718,50**
Additional option MAS				
Exchange connectiong piece ⌀ 200 mm		R009105		84,00
Exchange connectiong piece⌀ 160 mm		07137		84,00

Energy efficiency index A +

HKD 2.6 k side-opening door flat glass

Set consists of:	Art.-Nr.	No.	Price
HKD 2.6 k DF, Double glazing		1	
Door frame or mounting frame		1	
Inner lining set for HKD 2.6 k		1	
Upper lining for HKD 2.6 k		1	
Support bearing HKD 2.6 k		1	

Additional options			
EAS (see page 114)			2264,00
Reduced price for EAS without display			-214,50
Door handle black	02056-01		130,50

Available variants:

Front variants:				
Door frame, black		SET208517		**5608,50**
Cast iron frame, black		SET208519		**5628,00**

Energy efficiency index A +

HKD 4.1 side-opening door flat glass

DHT

Set consists of:	Art.-Nr.	No.	Price
HKD 4.1 DF, single glazing		1	
Door frame or mounting frame, front plate		1	
Inner lining set for HKD 4.1		1	
Upper lining for HKD 4.1		1	
Support bearing HKD 4.1		1	

Additional options			
EAS (see page 114)			2264,00
Reduced price for EAS without display			-214,50
Additional door DHT middle			1551,50
EAS at DHT			2474,50
Revision handle	02429		101,50
Conversion kit LH door	900110		69,00
Double glazing			0,00
Door handle black	02056-01		130,50

Available variants:

Front variants:				
Door frame, black		SET208541		**5599,00**
Door frame, stainless steel		SET208542		**5712,50**
Mounting frame, black		SET208725		**5657,00**
Mounting frame, stainless steel		SET208726		**5762,50**
Cast iron frame		SET208544		**5632,50**
Steel front plate, black 48 x 83 cm		SET208545		**5821,00**
Cast iron front plate 48 x 83 cm		SET208547		**5744,00**

Energy efficiency index A +

HKD 4.1 side-opening door cast iron doors

DHT middle

Set consists of:	Art.-Nr.	No.	Price
HKD 4.1, cast iron doors		1	
Blend/ frontplate		1	
Inner lining set for HKD 4.1		1	
Upper lining for HKD 4.1		1	
Support bearing HKD 4.1		1	

Additional options			
EAS (see page 114)			2264,00
Reduced price for EAS without display			-214,50
Additional door DHT middle			1551,50
EAS at DHT			2474,50
Conversion kit LH door	900110		69,00
Revision handle	02429		101,50
Door handle black	02056-01		130,50

Available variants:

Front variants:				
Cast iron frame, black		SET208558		**5632,50**
Cast iron front plate 48 x 83 cm		SET208559		**5744,00**

Energy efficiency index A +

DHT

HKD 5.1 side-opening door flat glass

Set consists of:	Art.-Nr.	No.	Price
HKD 5.1 DF, single glazing		1	
Door frame or mounting frame, front plate		1	
Inner lining set for HKD 5.1		1	
Upper lining for HKD 5.1		1	
Support bearing HKD 5.1		1	

Additional options			
EAS (see page 114)			2264,00
Reduced price for EAS without display			-214,50
Additional door DHT middle			1551,50
EAS at DHT			2474,50
Revision handle	02429		101,50
Conversion kit LH door	900110		69,00
Double glazing			0,00
Door handle black	02056-01		130,50

Available variants:

Front variants:				
Door frame, black		SET208574		**5230,00**
Door frame, stainless steel		SET208575		**5343,50**
Mounting frame, black		SET208729		**5288,00**
Mounting frame, stainless steel		SET208730		**5393,50**
Cast iron frame		SET208576		**5263,50**
Steel front plate, black 48 x 83 cm		SET208577		**5452,00**
Cast iron front plate 48 x 83 cm		SET208579		**5375,00**

Energy efficiency index A +

DHT middle

HKD 5.1 side-opening door cast iron doors

Set consists of:	Art.-Nr.	No.	Price
HKD 5.1, cast iron doors		1	
Blend/ frontplate		1	
Inner lining set for HKD 5.1		1	
Upper lining for HKD 5.1		1	
Support bearing HKD 5.1		1	

Additional options			
EAS (see page 114)			2264,00
Reduced price for EAS without display			-214,50
Additional door DHT middle			1551,50
EAS at DHT			2474,50
Conversion kit LH door	900110		69,00
Revision handle	02429		101,50
Door handle black	02056-01		130,50

Available variants:

Front variants:				
Cast iron frame, black		SET208584		**5263,50**
Cast iron front plate 48 x 83 cm		SET208585		**5375,00**

Energy efficiency index A +

HKD 6.1 side-opening door flat glass

Set consists of:	Art.-Nr.	No.	Price
HKD 6.1 DF, single glazing		1	
Blend/ frontplate		1	
Inner lining set for HKD 6.1		1	
Upper lining for HKD 6.1		1	
Support bearing HKD 6.1		1	

Additional options			
EAS (see page 114)			2264,00
Reduced price for EAS without display			-214,50
Conversion kit LH door	900110		69,00
Double glazing			0,00
Door handle black	02056-01		130,50

Available variants:

Front variants:				
Door frame, black		SET208587		**3836,50**
Door frame, stainless steel		SET208588		**3923,00**
Cast iron frame, black		SET208589		**3856,50**
Steel front plate, black 42 x 79 cm		SET208590		**4053,50**
Steel front plate, black 48 x 83 cm		SET208592		**4099,00**
Cast iron front plate, 48 x 83 cm		SET210404		**4050,50**

Energy efficiency index A +

HKD 6.1 side-opening door cast iron doors

Set consists of:	Art.-Nr.	No.	Price
HKD 6.1, cast iron doors		1	
Blend/ frontplate		1	
Inner lining set for HKD 6.1		1	
Upper lining for HKD 6.1		1	
Support bearing HKD 6.1		1	

Additional options			
EAS (see page 114)			2264,00
Reduced price for EAS without display			-214,50
Conversion kit LH door	900110		69,00
Door handle black	02056-01		130,50

Available variants:

Front variants:				
Cast iron frame, black		SET208599		**3856,50**
Cast iron front plate 42 x 79 cm		SET208600		**4022,50**
Cast iron front plate 48 x 83 cm		SET210405		**4050,50**

Energy efficiency index A +

HKD 7 side-opening door flat glass

Set consists of:	Art.-Nr.	No.	Price
HKD 7 DF, single glazing		1	
Mounting frame		1	
Inner lining set for HKD 7		1	
Support bearing HKD 7		1	

Additional options (for all smoke hood variants)			
EAS (see page 114)			2264,00
Reduced price for EAS without display			-214,50
Double glazing			232,00
Door hinge self-closing	D030134		94,50
Door handle black	02056-01		130,50

Smoke hood variants:

+ **Cast iron dome ⌀ 180 mm**	D004186	1	
Front variants:			
Mounting frame, black	SET212697		**6900,50**
Door frame, black	SET212732		**6921,00**
Additional option for cast iron dome			
Cast iron hood ⌀ 200 mm	10087		0,00

+ **Cast iron cover ⌀ 180 mm and cast iron heat exchanger rings**	R015006-02	2	
Front variants:			
Mounting frame, black	SET213233		**8482,50**
Door frame, black	SET213234		**8503,00**
Alternative article: connection piece eccentric instead of cast iron dome			
Connection piece eccentric ⌀ 180 mm	S003024		-206,00
Connection piece eccentric ⌀ 200 mm	S003025		-206,00
Additional options			
90° bend - dumper flap and cleaning ⌀ 180 mm	S002198		**306,00**
90° bend - dumper flap and cleaning ⌀ 200 mm	S002208		**329,00**

+ **Cast iron dome ⌀ 180 mm low**	D016042	1	
Front variants:			
Mounting frame, black	SET212708		**7264,50**
Door frame, black	SET212733		**7285,00**

+ **Modular accumulator MAS 440 double-layered**	R009042	7	
Cast iron dome MAS ⌀ 180	R009095-01	1	
Mounting ring	10077	1	
Front variants:			
Mounting frame, black	SET212699		**9544,50**
Door frame, black	SET212734		**9565,00**
Additional option MAS			
Exchange connectiong piece ⌀ 200 mm	R009105		84,00
Exchange connectiong piece⌀ 160 mm	07137		84,00

Energy efficiency index A +

HKD 8 side-opening door flat glass

Set consists of:	Art.-Nr.	No.	Price
HKD 8 DF, single glazing		1	
Inner lining set for HKD 8		1	
Support bearing HKD 8		1	

Additional options (for all smoke hood variants)			
EAS (see page 114)			2264,00
Reduced price for EAS without display			-214,50
Double glazing			232,00
Construction plates for door frame HKD 8	SET212720		240,50

Attention:
The choice of door variant (left or right closing doors) and the EOS/EAS option must be already made when placing the order.
Later modifications are not possible anymore!
Selfclosing doors are not available!

Smoke hood variants:

+ **Cast iron dome ⌀ 180 mm**		D004186	1	
Front variants:				
Mounting bracket, black		SET212701		**7429,00**
Door frame, black		SET212740		**8136,00**
Additional option for cast iron dome				
Cast iron hood ⌀ 200 mm		10087		

+ **Cast iron cover ⌀ 180 mm and cast iron heat exchanger rings**		R015006-02	2	
Front variants				
Mounting bracket, black		SET213235		**9011,00**
Door frame, black		SET213236		**9718,00**
Alternative article: connection piece eccentric instead of cast iron dome				
Connection piece eccentric ⌀ 180 mm		S003024		-206,00
Connection piece eccentric ⌀ 200 mm		S003025		-206,00
Additional options				
90° bend - dumper flap and cleaning ⌀ 180 mm		S002198		**306,00**
90° bend - dumper flap and cleaning ⌀ 200 mm		S002208		**329,00**

+ **Cast iron dome ⌀ 180 mm low**		D016042	1	
Front variants:				
Mounting bracket, black		SET212710		**7793,00**
Door frame, black		SET212741		**8500,00**

+ **Modular accumulator MAS 440 double-layered**		R009042	7	
Cast iron dome MAS ⌀ 180		R009095-01	1	
Mounting ring		10077	1	
Front variants:				
Mounting bracket, black		SET212702		**10073,00**
Door frame, black		SET212742		**10780,00**
Additional option MAS				
Exchange connectiong piece ⌀ 200 mm		R009105		84,00
Exchange connectiong piece⌀ 160 mm		07137		84,00

Energy efficiency index A +

HKD 13 side-opening door flat glass

Set consists of:	Art.-Nr.	No.	Price
HKD 13 DF, single glazing		1	
Mounting frame		1	
Inner lining set for HKD 13		1	
Support bearing HKD 13		1	

Additional options (for all smoke hood variants)			
EAS (see page 114)			2264,00
Reduced price for EAS without display			-214,50
Glass ceramic coated (GKB)			159,00
Door hinge self-closing	D030134		94,50
Door handle black	02056-01		130,50
Catalyst module BKH 5.0 / HKD 13	HK000210		1263,00

Smoke hood variants:

+ **Cast iron dome ⌀ 180 mm**		D004186	1	
Front variants:				
Mounting frame, black		SET213249		**7808,50**
Door frame, black		SET213250		**7823,50**
Additional option for cast iron dome				
Cast iron hood ⌀ 200 mm		10087		0,00

+ **Cast iron cover ⌀ 180 mm and cast iron heat exchanger rings**		R015006-02	2	
Front variants:				
Mounting frame, black		SET213251		**9390,00**
Door frame, black		SET213252		**9405,50**
Alternative article: connection piece eccentric instead of cast iron dome				
Connection piece eccentric ⌀ 180 mm		S003024		-206,00
Connection piece eccentric ⌀ 200 mm		S003025		-206,00
Additional options				
90° bend - dumper flap and cleaning ⌀ 180 mm		S002198		**306,00**
90° bend - dumper flap and cleaning ⌀ 200 mm		S002208		**329,00**

+ **Cast iron dome ⌀ 180 mm low**		D016042	1	
Front variants:				
Mounting frame, black		SET213253		**8172,00**
Door frame, black		SET213254		**8187,50**

+ **Modular accumulator MAS 440 double-layered**	R009042	7	
Cast iron dome MAS ⌀ 180	R009095-01	1	
Mounting ring	10077	1	
Front variants:			
Mounting frame, black	SET213255		**10452,50**
Door frame, black	SET213256		**10467,50**
Additional option MAS			
Exchange connectiong piece ⌀ 200 mm	R009105		84,00
Exchange connectiong piece⌀ 160 mm	07137		84,00

Energy efficiency index A +

WF 25 single glazed

Set consists of:	Art.-Nr.	No.	Price
WF 25 single glazed black outlet ⌀ 145 mm		1	
Combustion chamber lining WF 25		1	

Additional options			
*EAS (see page 114)			2264,00
Reduced price for EAS without display			-214,50
Air connecting piece	C011037		65,50
Support bearing WF 25	N002104		278,50
Exchange connectiong piece ⌀ 160 mm	07137		84,00
Exchange connectiong piece ⌀ 180 mm	07139		84,00
For version with EAS only 180 mm ⌀ connecting piece possible			

Door-version:	Art.-Nr.	No.	Price
Cast iron door inlay	C011106	1	169,50
Cast iron door inlay Assembly at the factory	C011106m	1	101,00

Available variants:

Front variants:				
Cast iron front plate 83/48 cm		SET211023		**3564,00**
Cast iron front plate 79/42 cm		SET211024		**3564,00**
Cast iron front plate 89,5/48 cm		SET211027		**3754,00**
Cast iron front plate 106/48 cm		SET212980		**4133,00**

*For the EAS variant, the air connecting piece is already included.

Energy efficiency index A +

WF 33 single glazed

Set consists of:	Art.-Nr.	No.	Price
WF 33 single glazed black outlet ⌀ 180 mm		1	
Combustion chamber lining WF 33		1	

Additional options			
*EAS (see page 114)			2264,00
Reduced price for EAS without display			-214,50
Air connecting piece	C011037		65,50
Support bearing WF 33	N002088		278,50
Setting steel plate 200 mm depth for106 x 48 cm front pannel	C014086		126,00
Exchange connectiong piece ⌀ 145 mm	R014013		84,00
Exchange connectiong piece ⌀ 160 mm	07137		84,00
For version with EAS only 180 mm ⌀ connecting piece possible			

Door-version:	Art.-Nr.	No.	Price
Cast iron door inlay	C011106	1	169,50
Cast iron door inlay Assembly at the factory	C011106m	1	101,00

Available variants:

Front variants:				
Cast iron front plate 83/48 cm		SET211612		**3564,00**
Cast iron front plate 83/52 cm		SET213130		**3781,50**
Cast iron front plate 79/42 cm		SET211974		**3564,00**
Cast iron front plate 89,5/48 cm		SET211025		**3754,00**
Cast iron front plate 106/48 cm		SET212978		**4133,00**

*For the EAS variant, the air connecting piece is already included.

Energy efficiency index A +

WF 50 single glazed

Set consists of:	Art.-Nr.	No.	Price
WF 50 single glazed black outlet ⌀ 180 mm		1	
Combustion chamber lining WF 50		1	

Additional options			
*EAS (see page 114)			2264,00
Reduced price for EAS without display			-214,50
Air connecting piece	C011037		65,50
Support bearing WF 50	N002090		296,50
Setting steel plate 200 mm depth for106 x 48 cm front pannel	C014086		126,00
Exchange connectiong piece ⌀ 145 mm	R014013		84,00
Exchange connectiong piece ⌀ 160 mm	07137		84,00
For version with EAS only 180 mm ⌀ connecting piece possible			

Door-version:	Art.-Nr.	No.	Price
Cast iron door inlay	C011106	1	169,50
Cast iron door inlay Assembly at the factory	C011106m	1	101,00

Available variants:

Front variants:				
Cast iron front plate 83/48 cm		SET211613		**4368,00**
Cast iron front plate 83/52 cm		SET213131		**4585,00**
Cast iron front plate 79/42 cm		SET211975		**4368,00**
Cast iron front plate 89,5/48 cm		SET211026		**4558,00**
Cast iron front plate 106/48 cm		SET212979		**4936,50**

*For the EAS variant, the air connecting piece is already included.

Energy efficiency index A +

WF_R 25 single glazed

Set consists of:	Art.-Nr.	No.	Price
WF_R 25 single glazed black outlet ⌀ 145 mm		1	
Combustion chamber lining WF_R 25		1	

Additional options			
Air connecting piece	C011037		65,50
Support bearing WF_R 25	N002104		278,50
Exchange connectiong piece ⌀ 160 mm	07137		84,00
Exchange connectiong piece ⌀ 180 mm	07139		84,00

Door-version:	Art.-Nr.	No.	Price
Cast iron door inlay	C011106	1	169,50
Cast iron door inlay Assembly at the factory	C011106m	1	101,00

Available variants:

Front variants:				
Cast iron front plate 83/48 cm		SET212972		**3697,00**
Cast iron front plate 79/42 cm		SET212973		**3697,00**
Cast iron front plate 89,5/48 cm		SET212974		**3886,50**
Cast iron front plate 106/48 cm		SET212983		**4265,00**

Energy efficiency index A +

WF_R 33 single glazed

Set consists of:	Art.-Nr.	No.	Price
WF_R 33 single glazed black outlet ⌀ 180 mm		1	
Combustion chamber lining WF_R 33		1	

Additional options			
Air connecting piece	C011037		65,50
Support bearing WF_R 33	N002088		278,50
Setting steel plate 200 mm depth for106 x 48 cm front pannel	C014086		126,00
Exchange connectiong piece ⌀ 145 mm	R014013		84,00
Exchange connectiong piece ⌀ 160 mm	07137		84,00

Door-version:	Art.-Nr.	No.	Price
Cast iron door inlay	C011106	1	169,50
Cast iron door inlay Assembly at the factory	C011106m	1	101,00

Available variants:

Front variants:				
Cast iron front plate 83/48 cm		SET212933		**3697,00**
Cast iron front plate 83/52 cm		SET213385		**3914,50**
Cast iron front plate 79/42 cm		SET212934		**3697,00**
Cast iron front plate 89,5/48 cm		SET212935		**3886,50**
Cast iron front plate 106/48 cm		SET212981		**4265,00**

Energy efficiency index A +

WF_R 50 single glazed

Set consists of:	Art.-Nr.	No.	Price
WF_R 50 single glazed black outlet ⌀ 180 mm		1	
Combustion chamber lining WF_R 50		1	

Additional options			
Air connecting piece	C011037		65,50
Support bearing WF_R 50	N002090		296,50
Setting steel plate 200 mm depth for106 x 48 cm front pannel	C014086		126,00
Exchange connectiong piece ⌀ 145 mm	R014013		84,00
Exchange connectiong piece ⌀ 160 mm	07137		84,00

Door-version:	Art.-Nr.	No.	Price
Cast iron door inlay	C011106	1	169,50
Cast iron door inlay Assembly at the factory	C011106m	1	101,00

Available variants:

Front variants:				
Cast iron front plate 83/48 cm		SET212975		**4494,50**
Cast iron front plate 83/52 cm		SET213386		**4712,00**
Cast iron front plate 79/42 cm		SET212976		**4494,50**
Cast iron front plate 89,5/48 cm		SET212977		**4685,00**
Cast iron front plate 106/48 cm		SET212982		**5063,50**

Energy efficiency index A +

Ortrander Heizeinsätze

Designation	Art.-Nr.	No.	Price
Ortrand 3020.61 outlet ⌀ 160 mm	11005.1		2735,50

Additional options			
Ortrand GR1.0 Cast iron radiator	11021		769,00

Energy efficiency index A +

Designation	Art.-Nr.	No.	Price
Ortrand 4020.61 outlet ⌀ 160 mm	11006.1		3045,00

Additional options			
Ortrand GR1.0 Cast iron radiator	11021		769,00

Energy efficiency index A +

HKD 2.2 Tunnel 2 side-opening doors flat glass

Set consists of:	Art.-Nr.	No.	Price
HKD 2.2 D/DF, single glazing		1	
Door frame or mounting frame		2	
Upper lining for HKD 2.2 Tunnel		1	
Inner lining set for HKD 2.2 Tunnel		1	
Support bearing HKD 2.2		1	

Additional options (for all smoke hood variants)			
EAS (see page 114)			2474,50
Reduced price for EAS without display			-214,50
Double glazing			464,00
Door lock as revision handle			101,50
Door handle black	02056-01		130,50

Smoke hood variants:

+ **Cast iron dome ⌀ 180 mm**		D009363	1	
Front variants:				
Door frame, black		SET208468		**6986,00**
Door frame, stainless steel		SET208469		**7119,50**
Mounting frame, black		SET208470		**7279,00**
Mounting frame, stainless steel		SET208471		**7598,00**

+ **Cast iron cover ⌀ 180 mm and cast iron heat exchanger rings**		R015006-02	2	
Front variants:				
Door frame, black		SET213335		**8505,00**
Door frame, stainless steel		SET213336		**8638,50**
Mounting frame, black		SET213337		**8798,00**
Mounting frame, stainless steel		SET213338		**9117,00**
Alternative article: connection piece eccentric instead of cast iron dome				
Connection piece eccentric ⌀ 180 mm		S003024		-206,00
Connection piece eccentric ⌀ 200 mm		S003025		-206,00
Additional options				
90° bend - dumper flap and cleaning ⌀ 180 mm		S002198		**306,00**
90° bend - dumper flap and cleaning ⌀ 200 mm		S002208		**329,00**

+ **Cast iron dome ⌀ 180 mm low**		D003664	1	
Front variants:				
Door frame, black		SET212888		**7287,00**
Door frame, stainless steel		SET212889		**7420,50**
Mounting frame, black		SET212890		**7580,00**
Mounting frame, stainless steel		SET212891		**7899,00**

+ **Modular accumulator MAS 440 double-layered**	R009042	5	
Cast iron dome MAS ⌀ 180	R009095-01	1	
Mounting ring	10077	1	
Front variants:			
Door frame, black	SET212832		**8943,50**
Door frame, stainless steel	SET212833		**9077,00**
Mounting frame, black	SET212834		**9236,50**
Mounting frame, stainless steel	SET212835		**9555,50**
Additional option MAS			
Exchange connectiong piece ⌀ 200 mm	R009105		84,00
Exchange connectiong piece⌀ 160 mm	07137		84,00

Energy efficiency index A +

HKD 2.2 XL Tunnel 2 side-opening doors flat glass

Set consists of:	Art.-Nr.	No.	Price
HKD 2.2 XL D/D F, single glazing		1	
Door frame or mounting frame		2	
Inner lining set for HKD 2.2 XL Tunnel		1	
Upper lining for HKD 2.2 XL		1	
Support bearing HKD 2.2 XL		1	

Additional options			
EAS (see page 114)			2474,50
Reduced price for EAS without display			-214,50
Double glazing			464,00
Door lock as revision handle			101,50
Door handle black	02056-01		130,50

Smoke hood variants:

+ **Cast iron dome ⌀ 180 mm**		D009363	1	
Front variants:				
Door frame, black		SET208224		**7722,00**
Door frame, stainless steel		SET208225		**7855,50**
Mounting frame, black		SET208226		**8015,00**
Mounting frame, stainless steel		SET208227		**8334,00**

+ **Cast iron dome ⌀ 180 mm, low**		D003664	1	
Front variants:				
Door frame, black		SET212904		**8023,00**
Door frame, stainless steel		SET212905		**8156,50**
Mounting frame, black		SET212906		**8316,00**
Mounting frame, stainless steel		SET212907		**8635,00**

Energy efficiency index A +

HKD 2.2 Tunnel 2 side-opening doors round

Set consists of:	Art.-Nr.	No.	Price
HKD 2.2 D/D R, single glazing		1	
Door frame or mounting frame		2	
Upper lining for HKD 2.2 Tunnel		1	
Inner lining set for HKD 2.2 Tunnel		1	
Support bearing HKD 2.2		1	

Additional options (for all smoke hood variants)			
EAS (see page 114)			2474,50
Reduced price for EAS without display			-214,50
Door lock as revision handle			101,50
Door handle black	02056-01		130,50

Smoke hood variants:

+ **Cast iron dome ⌀ 180 mm**		D009363	1	
Front variants:				
Door frame, black R = 380		SET208489		**8159,00**
Mounting frame, black R = 330		SET208491		**8159,00**

+ **Cast iron cover ⌀ 180 mm and cast iron heat exchanger rings**		R015006-02	2	
Front variants:				
Door frame, black R = 380		SET213339		**9678,00**
Mounting frame, black R = 330		SET213340		**9678,00**
Alternative article: connection piece eccentric instead of cast iron dome				
Connection piece eccentric ⌀ 180 mm		S003024		-206,00
Connection piece eccentric ⌀ 200 mm		S003025		-206,00
Additional options				
90° bend - dumper flap and cleaning ⌀ 180 mm		S002198		**306,00**
90° bend - dumper flap and cleaning ⌀ 200 mm		S002208		**329,00**

+ **Cast iron dome ⌀ 180 mm low**		D003664	1	
Front variants:				
Door frame, black R = 380		SET212866		**8460,00**
Mounting frame, black R = 330		SET212868		**8460,00**

+ **Modular accumulator MAS 440 double-layered**		R009042	5	
Cast iron dome MAS ⌀ 180		R009095-01	1	
Mounting ring		10077	1	
Front variants:				
Door frame, black R = 380		SET212854		**10116,50**
Mounting frame, black R = 330		SET212856		**10116,50**
Additional option MAS				
Exchange connectiong piece ⌀ 200 mm		R009105		84,00
Exchange connectiong piece⌀ 160 mm		07137		84,00

Energy efficiency index A +

HKD 2.2 XL Tunnel 2 side-opening doors round

Set consists of:	Art.-Nr.	No.	Price
HKD 2.2 XL D/D R, single glazing		1	
Door frame or mounting frame		2	
Inner lining set for HKD 2.2 XL Tunnel		1	
Upper lining for HKD 2.2 XL		1	
Support bearing HKD 2.2 XL		1	

Additional options			
EAS (see page 114)			2474,50
Reduced price for EAS without display			-214,50
Door lock as revision handle			101,50
Door handle black	02056-01		130,50

Smoke hood variants:

+ **Cast iron dome ⌀ 180 mm**		D009363	1	
Front variants:				
Door frame R = 380, black		SET208243		**8822,00**
Mounting frame R = 330, black		SET208245		**8822,00**

+ **Cast iron dome ⌀ 180 mm, low**		D003664	1	
Door frame R = 380, black		SET212909		**9122,50**
Mounting frame R = 330, black		SET212911		**9122,50**

Energy efficiency index A +

HKD 7 Tunnel side-opening door/side-opening door flat glass

Set consists of:	Art.-Nr.	No.	Price
HKD 7 D/D F, single glazing		1	
Mounting frame		2	
Inner lining set for HKD 7 Tunnel		1	
Support bearing HKD 7		1	

Additional options (for all smoke hood variants)			
EAS (see page 114)			2474,50
Reduced price for EAS without display			-214,50
Double glazing			464,00
Revision handle	02429		101,50
Door hinge self-closing	D030134		94,50
Door handle black	02056-01		130,50

Smoke hood variants:

+ **Cast iron dome ⌀ 180 mm**	D004186	1	
Front variants:			
Mounting frame, black	SET212698		**8884,00**
Door frame, black	SET212735		**8925,00**
Additional option for cast iron dome			
Cast iron hood ⌀ 200 mm	10087		0,00

Cast iron cover ⌀ 180 mm and cast iron heat exchanger rings	R015006-02	2	
Front variants			
Mounting frame, black	SET213237		**10466,00**
Door frame, black	SET213238		**10506,50**
Alternative article: connection piece eccentric instead of cast iron dome			
Connection piece eccentric ⌀ 180 mm	S003024		-206,00
Connection piece eccentric ⌀ 200 mm	S003025		-206,00
Additional options			
90° bend - dumper flap and cleaning ⌀ 180 mm	S002198		**306,00**
90° bend - dumper flap and cleaning ⌀ 200 mm	S002208		**329,00**

+ **Cast iron dome ⌀ 180 mm low**	D016042	1	
Front variants:			
Mounting frame, black	SET212709		**9248,00**
Door frame, black	SET212736		**9288,50**

+ **Modular accumulator MAS 440 double-layered**	R009042	7	
Cast iron dome MAS ⌀ 180	R009095-01	1	
Mounting ring	10077	1	
Front variants:			
Mounting frame, black	SET212700		**11528,00**
Door frame, black	SET212737		**11569,00**
Additional option MAS			
Exchange connectiong piece ⌀ 200 mm	R009105		84,00
Exchange connectiong piece⌀ 160 mm	07137		84,00

Energy efficiency index A +

HKD 8 Tunnel side-opening door/side-opening door flat glass

Set consists of:	Art.-Nr.	No.	Price
HKD 8 D/D F, single glazing		1	
Inner lining set for HKD 8 Tunnel		1	
Support bearing HKD 8		1	

Additional options (for all smoke hood variants)			
EAS (see page 114)			2474,50
Reduced price for EAS without display			-214,50
Double glazing			464,00
Construction plates for door frame HKD 8	SET212720		240,50

Attention:
The choice of door variant (left or right closing doors) and the EOS/EAS option must be already made when placing the order.
Later modifications are not possible anymore!
Selfclosing doors are not available!

Smoke hood variants:

+ **Cast iron dome ⌀ 180 mm**		D004186	1	
Front variants:				
Mounting bracket, black		SET212703		**9982,50**
Door frame, black		SET212743		**11396,50**
Additional option for cast iron dome				
Cast iron hood ⌀ 200 mm		10087		0,00

+ **Cast iron cover ⌀ 180 mm and cast iron heat exchanger rings**		R015006-02	2	
Front variants				
Mounting bracket, black		SET213239		**11564,50**
Door frame, black		SET213240		**12978,00**
Alternative article: connection piece eccentric instead of cast iron dome				
Connection piece eccentric ⌀ 180 mm		S003024		-206,00
Connection piece eccentric ⌀ 200 mm		S003025		-206,00
Additional options				
90° bend - dumper flap and cleaning ⌀ 180 mm		S002198		**306,00**
90° bend - dumper flap and cleaning ⌀ 200 mm		S002208		**329,00**

+ **Cast iron dome ⌀ 180 mm low**		D016042	1	
Front variants:				
Mounting bracket, black		SET212711		**10346,50**
Door frame, black		SET212744		**11760,00**

+ **Modular accumulator MAS 440 double-layered**		R009042	7	
Cast iron dome MAS ⌀ 180		R009095-01	1	
Mounting ring		10077	1	
Front variants:				
Mounting bracket, black		SET212704		**12626,50**
Door frame, black		SET212745		**14040,50**
Additional option MAS				
Exchange connectiong piece ⌀ 200 mm		R009105		84,00
Exchange connectiong piece⌀ 160 mm		07137		84,00

Energy efficiency index A +

HKD 13 Tunnel side-opening door/side-opening door flat glass

Set consists of:	Art.-Nr.	No.	Price
HKD 13 D/D F, single glazing		1	
Mounting frame / Door frame		2	
Inner lining set for HKD 13 Tunnel		1	
Support bearing HKD 13		1	

Additional options (for all smoke hood variants)			
EAS (see page 114)			2474,50
Reduced price for EAS without display			-214,50
Glass ceramic coated (GKB)			317,50
Revision handle	02429		101,50
Door handle black	02056-01		130,50
Door hinge self-closing	D030134		94,50
Catalyst module BKH 5.0 / HKD 13	HK000210		1263,00

Smoke hood variants:

+ **Cast iron dome ⌀ 180 mm**		D004186	1	
Front variants:				
Mounting frame, black		SET213257		**9809,50**
Door frame, black		SET213258		**9839,50**
Additional option for cast iron dome				
Cast iron hood ⌀ 200 mm		10087		0,00

Cast iron cover ⌀ 180 mm and cast iron heat exchanger rings		R015006-02	2	
Front variants				
Mounting frame, black		SET213259		**11391,00**
Door frame, black		SET213260		**11421,50**
Alternative article: connection piece eccentric instead of cast iron dome				
Connection piece eccentric ⌀ 180 mm		S003024		-206,00
Connection piece eccentric ⌀ 200 mm		S003025		-206,00
Additional options				
90° bend - dumper flap and cleaning ⌀ 180 mm		S002198		**306,00**
90° bend - dumper flap and cleaning ⌀ 200 mm		S002208		**329,00**

+ **Cast iron dome ⌀ 180 mm low**		D016042	1	
Front variants:				
Mounting frame, black		SET213261		**10173,00**
Door frame, black		SET213262		**10203,50**

+ **Modular accumulator MAS 440 double-layered**		R009042	7	
Cast iron dome MAS ⌀ 180		R009095-01	1	
Mounting ring		10077	1	
Front variants:				
Mounting frame, black		SET213263		**12453,50**
Door frame, black		SET213264		**12484,00**
Additional option MAS				
Exchange connectiong piece ⌀ 200 mm		R009105		84,00
Exchange connectiong piece⌀ 160 mm		07137		84,00

Energy efficiency index A +

HKD 2.2 side-opening door round

Set consists of:	Art.-Nr.	No.	Price
HKD 2.2 DR, single glazing		1	
Door frame or mounting frame		1	
Upper lining for HKD 2.2		1	
Inner lining set for HKD 2.2		1	
Support bearing HKD 2.2		1	

Additional options (for all smoke hood variants)			
EAS (see page 114)			2264,00
Reduced price for EAS without display			-214,50
Additional door DHT middle			1689,50
EAS at DHT			2474,50
Revision handle	02429		101,50
Door handle black	02056-01		130,50

DHT middle

Smoke hood variants:

+ **Cast iron dome ⌀ 180 mm**		D009363	1	
Front variants:				
Door frame, black R = 380		SET208484		**6268,50**
Mounting frame, black R = 330		SET208486		**6268,50**

+ **Cast iron cover ⌀ 180 mm and cast iron heat exchanger rings**		R015006-02	2	
Front variants:				
Door frame, black R = 380		SET213341		**7787,00**
Mounting frame, black R = 330		SET213342		**7787,00**
Alternative article: connection piece eccentric instead of cast iron dome				
Connection piece eccentric ⌀ 180 mm		S003024		-206,00
Connection piece eccentric ⌀ 200 mm		S003025		-206,00
Additional options				
90° bend - dumper flap and cleaning ⌀ 180 mm		S002198		**306,00**
90° bend - dumper flap and cleaning ⌀ 200 mm		S002208		**329,00**

+ **Cast iron dome ⌀ 180 mm low**		D003664	1	
Front variants				
Door frame, black R = 380		SET212862		**6569,00**
Mounting frame, black R = 330		SET212864		**6569,00**

+ **Modular accumulator MAS 440 double-layered**		R009042	5	
Cast iron dome MAS ⌀ 180		R009095-01	1	
Mounting ring		10077	1	
Front variants:				
Door frame, black R = 380		SET212850		**8226,00**
Mounting frame, black R = 330		SET212852		**8226,00**
Additional option MAS				
Exchange connectiong piece ⌀ 200 mm		R009105		84,00
Exchange connectiong piece⌀ 160 mm		07137		84,00

Energy efficiency index A +

HKD 2.2 k side-opening door round

Set consists of:	Art.-Nr.	No.	Price
HKD 2.2 k DR, single glazing		1	
Door frame or mounting frame		1	
Inner lining set for HKD 2.2 k		1	
Upper lining for HKD 2.2 k		1	
Support bearing HKD 2.2 k		1	

Additional options			
EAS (see page 114)			2264,00
Reduced price for EAS without display			-214,50
Door handle black	02056-01		130,50
MAS (see page 342)			

Available variants:

Front variants:				
Door frame R = 380, black		SET208509		**6167,50**
Mounting frame R = 330, black		SET208511		**6167,50**

Energy efficiency index A +

HKD 2.2 XL side-opening door round

Set consists of:	Art.-Nr.	No.	Price
HKD 2.2 XL DR, single glazing		1	
Door frame or mounting frame		1	
Inner lining set for HKD 2.2 XL		1	
Upper lining for HKD 2.2 XL		1	
Support bearing HKD 2.2 XL		1	

Additional options (for all smoke hood variants)			
EAS (see page 114)			2264,00
Reduced price for EAS without display			-214,50
Additional door DHT middle			1689,50
EAS at DHT			2474,50
Revision handle	02429		101,50
Door handle black	02056-01		130,50

DHT middle

Smoke hood variants:

+ **Cast iron dome ⌀ 180 mm**		D009363	1	
Front variants:				
Door frame R = 380, black		SET208239		**7038,50**
Mounting frame R = 330, black		SET208241		**7038,50**

+ **Cast iron dome ⌀ 180 mm low**		D003664	1	
Front variants:				
Door frame R = 380, black		SET212900		**7339,00**
Mounting frame R = 330, black		SET212902		**7339,00**

Energy efficiency index A +

HKD 11 Eck side-opening door left side

Set consists of:	Art.-Nr.	No.	Price
HKD 11 Eck DTL, single glazing two-piece ceramic glass		1	
Door frame or mounting frame		1	
Inner lining set for HKD 11		1	

Additional options (for all smoke hood variants)			
EAS (see page 114)			2264,00
Reduced price for EAS without display			-214,50

Smoke hood variants:

+ **Cast iron dome ⌀ 180 mm**	D004186	1	
Front variants:			
Mounting frame, black	SET213070		**7625,00**
Door frame, black	SET213071		**7728,50**
Additional option for cast iron dome			
Cast iron hood ⌀ 200 mm	10087		0,00

+ **Cast iron cover ⌀ 180 mm and cast iron heat exchanger rings**	R015006-02	2	
Front variants			
Mounting frame, black	SET213241		**9207,00**
Door frame, black	SET213242		**9310,50**
Alternative article: connection piece eccentric instead of cast iron dome			
Connection piece eccentric ⌀ 180 mm	S003024		-206,00
Connection piece eccentric ⌀ 200 mm	S003025		-206,00
Additional options			
90° bend - dumper flap and cleaning ⌀ 180 mm	S002198		**306,00**
90° bend - dumper flap and cleaning ⌀ 200 mm	S002208		**329,00**

+ **Cast iron dome ⌀ 180 mm low**	D016042	1	
Front variants:			
Mounting frame, black	SET213072		**7989,00**
Door frame, black	SET213073		**8092,50**

+ **Modular accumulator MAS 440 double-layered**	R009042	7	
Cast iron dome MAS ⌀ 180	R009095-01	1	
Mounting ring	10077	1	
Front variants:			
Mounting frame, black	SET213074		**10269,00**
Door frame, black	SET213075		**10372,50**
Additional option MAS			
Exchange connectiong piece ⌀ 200 mm	R009105		84,00
Exchange connectiong piece⌀ 160 mm	07137		84,00

Energy efficiency index A +

HKD 11 Eck side-opening door right side

Set consists of:	Art.-Nr.	No.	Price
HKD 11 Eck DTR, single glazing two-piece ceramic glass		1	
Door frame or mounting frame		1	
Inner lining set for HKD 11		1	

Additional options (for all smoke hood variants)			
EAS (see page 114)			2264,00
Reduced price for EAS without display			-214,50

Smoke hood variants:

+ **Cast iron dome ⌀ 180 mm**	D004186	1	
Front variants:			
Mounting frame, black	SET213076		**7625,00**
Door frame, black	SET213077		**7728,50**
Additional option for cast iron dome			
Cast iron hood ⌀ 200 mm	10087		0,00

+ **Cast iron cover ⌀ 180 mm and cast iron heat exchanger rings**	R015006-02	2	
Front variants			
Mounting frame, black	SET213243		**9207,00**
Door frame, black	SET213244		**9310,50**
Alternative article: connection piece eccentric instead of cast iron dome			
Connection piece eccentric ⌀ 180 mm	S003024		-206,00
Connection piece eccentric ⌀ 200 mm	S003025		-206,00
Additional options			
90° bend - dumper flap and cleaning ⌀ 180 mm	S002198		**306,00**
90° bend - dumper flap and cleaning ⌀ 200 mm	S002208		**329,00**

+ **Cast iron dome ⌀ 180 mm low**	D016042	1	
Front variants:			
Mounting frame, black	SET213078		**7989,00**
Door frame, black	SET213079		**8092,50**

+ **Modular accumulator MAS 440 double-layered**	R009042	7	
Cast iron dome MAS ⌀ 180	R009095-01	1	
Mounting ring	10077	1	
Front variants:			
Mounting frame, black	SET213080		**10269,00**
Door frame, black	SET213081		**10372,50**
Additional option MAS			
Exchange connectiong piece ⌀ 200 mm	R009105		84,00
Exchange connectiong piece⌀ 160 mm	07137		84,00

Energy efficiency index A +

HKD 12 Eck door hinge left side

Set consists of:	Art.-Nr.	No.	Price
HKD 12 Eck door hinge left side , single glazing two-piece ceramic glass		1	
Door frame or mounting frame		1	
Combustion chamber lining HKD 12		1	

Additional options (for all smoke hood variants)			
EAS (see page 114)			2264,00
Reduced price for EAS without display			-214,50

Attention:
The door variant (right- or left-closing door) must be choosen already when ordering.
Future modification is not possible !

Smoke hood variants:

+ **Cast iron dome ⌀ 180 mm**	D004186	1	
Front variants:			
Mounting frame, black	SET213132		**6867,00**
Door frame, black	SET213133		**6903,50**
Additional option for cast iron dome			
Cast iron hood ⌀ 200 mm	10087		0,00

+ **Cast iron cover ⌀ 180 mm and cast iron heat exchanger rings**	R015006-02	2	
Front variants			
Mounting frame, black	SET213245		**8449,00**
Door frame, black	SET213246		**8485,50**
Alternative article: connection piece eccentric instead of cast iron dome			
Connection piece eccentric ⌀ 180 mm	S003024		-206,00
Connection piece eccentric ⌀ 200 mm	S003025		-206,00
Additional options			
90° bend - dumper flap and cleaning ⌀ 180 mm	S002198		**306,00**
90° bend - dumper flap and cleaning ⌀ 200 mm	S002208		**329,00**

+ **Cast iron dome ⌀ 180 mm low**	D016042	1	
Front variants:			
Mounting frame, black	SET213134		**7231,00**
Door frame, black	SET213135		**7267,50**

+ **Modular accumulator MAS 440 double-layered**		R009042	5	
Cast iron dome MAS ⌀ 180		R009095-01	1	
Mounting ring		10077	1	
Front variants:				
Mounting frame, black		SET213136		**8888,00**
Door frame, black		SET213137		**8924,00**
Additional option MAS				
Exchange connectiong piece ⌀ 200 mm		R009105		84,00
Exchange connectiong piece⌀ 160 mm		07137		84,00

Energy efficiency index A +

HKD 12 Eck door hinge right side

Set consists of:	Art.-Nr.	No.	Price
HKD 12 Eck door hinge right side , single glazing two-piece ceramic glass		1	
Door frame or mounting frame		1	
Combustion chamber lining HKD 12		1	

Additional options (for all smoke hood variants)			
EAS (see page 114)			2264,00
Reduced price for EAS without display			-214,50

Attention:
The door variant (right- or left-closing door) must be choosen already when ordering.
Future modification is not possible !

Smoke hood variants:

+ **Cast iron dome ⌀ 180 mm**	D004186	1	
Front variants:			
Mounting frame, black	SET213082		**6867,00**
Door frame, black	SET213083		**6903,50**
Additional option for cast iron dome			
Cast iron hood ⌀ 200 mm	10087		0,00

+ **Cast iron cover ⌀ 180 mm and cast iron heat exchanger rings**	R015006-02	2	
Front variants			
Mounting frame, black	SET213247		**8449,00**
Door frame, black	SET213248		**8485,50**
Alternative article: connection piece eccentric instead of cast iron dome			
Connection piece eccentric ⌀ 180 mm	S003024		-206,00
Connection piece eccentric ⌀ 200 mm	S003025		-206,00
Additional options			
90° bend - dumper flap and cleaning ⌀ 180 mm	S002198		**306,00**
90° bend - dumper flap and cleaning ⌀ 200 mm	S002208		**329,00**

+ **Cast iron dome ⌀ 180 mm low**	D016042	1	
Front variants:			
Mounting frame, black	SET213084		**7231,00**
Door frame, black	SET213085		**7267,50**

+ **Modular accumulator MAS 440 double-layered**		R009042	5	
Cast iron dome MAS ⌀ 180		R009095-01	1	
Mounting ring		10077	1	
Front variants:				
Mounting frame, black		SET213086		**8888,00**
Door frame, black		SET213087		**8924,00**
Additional option MAS				
Exchange connectiong piece ⌀ 200 mm		R009105		84,00
Exchange connectiong piece⌀ 160 mm		07137		84,00

Energy efficiency index A +

Warm air grating

	Art.-Nr.	Designation	Retail price
		Warm air grating for Front plate size 48/83	
	10444	Warm air grating HKD 4/5 black Auslaufartikel	633,50
	10428	Warm air grating München (HKD 4/5)	438,50
		Warm air grating for Front plate size 42/79	
	10442S	Warm air grating HKD 6 black Auslaufartikel	520,50
	10437	Warm air grating suitable to Cast iron front plate HKD 6.1	376,50
		Warm air grating	
	10420	Air gratings Wien	438,50
	10410	Air gratings Passau	438,50
		Warm air grating with warming tube	
	10123	Air gratings Wien with warming tube	653,00
	10125	Air gratings Passau with warming tube	653,00

Art.-Nr. black painted	Designation	warmkeeping compartment	width B	height H	clearance height C	clearance width D	mounting width E	mounting height F	depth mounting frame T	free section A
10428	Cast iron front plate 48/83		480	230	178	414	433	206	30	195
10444	Steel black front plate 48/83		480	230	187	438	455	198	48-60	243
10437	Cast iron front plate 42/79		420	220	170	370	398	196	30	150
10442S	Steel black front plate 42/79		420	230	188	378	394	196	40	193
10420	Wien	10123	450	230	165	364	420	206	30	195
10410	Passau	10125	450	230	180	414	435	206	30	210
10457	Plasterwork grille		220	70			208	59		70

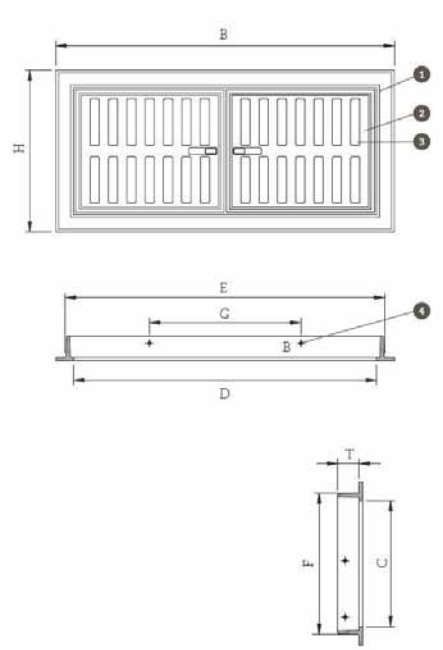

Warm air grating

1grille frame
2Grid door
3sliding grille
4fastening plate, storage tray, mounting bracket

Glazing formats

Flat glazing

from page 170

Cast iron

Door dimensions height x width in cm

Steel

Door dimensions height x width in cm

Tunnel formats

from page 180

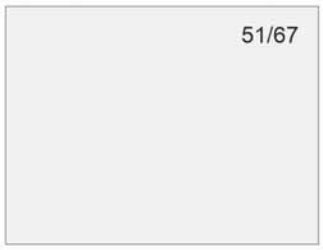

Door dimensions height x width in cm

Eck corners

from page 182

Steel

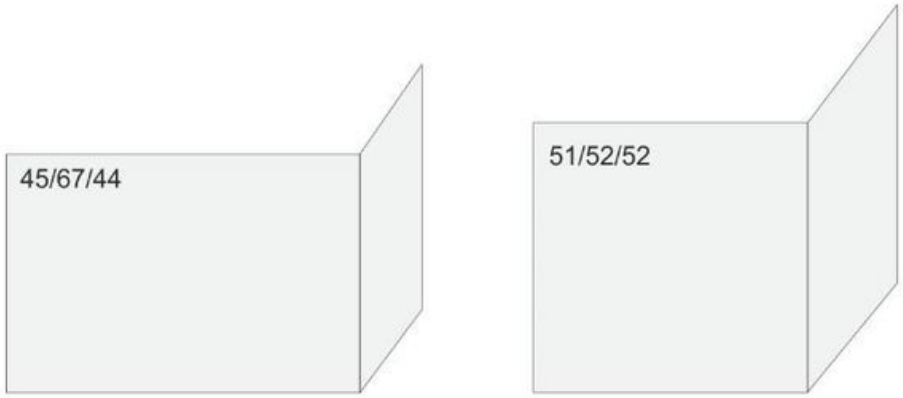

Door dimensions height x width x width in cm

Masonry heater doors
Door frame - mounting frame

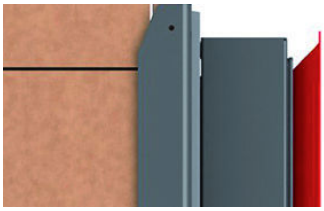
Door frame

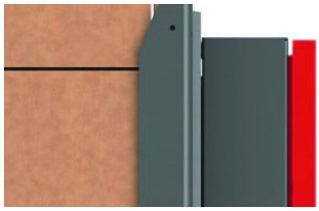
Mounting frame

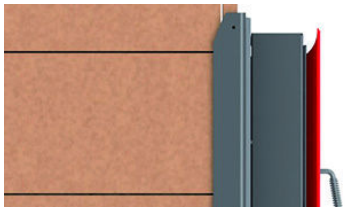
Cast iron frame

Supplementary equipment

EAS Combustion controls with potential-free relay (without additional functions) consisting of display, 1 x flush-mount box, door switch, thermocouple & bus line, each 2 m long. Preassembled EAS/EOS components, door switch, thermocouple, motor box with transmission and ø 125 mm air flap, flexible hose with adjustable clamps

EOS Combustion control with graphic touchscreen display and additional functions (differential temperature control, Moritz's flap control) consisting of: Display with control unit, 2 x flush-mount box, door switch, thermocouple, bus and connecting line, each 2 m long, 4 x water sensors with immersion sleeve and 2x extension cable 3 m. Preassembled EOS components: door switch, thermocouple, motor box with transmission and ø 125 mm air flap, flexible hose with adjustable clamps

GOT HBO 10

Set consists of:	Art.-Nr.	No.	Price
Masonry heater doors HBO 10, with viewing glass		1	

Available variants:

Front variants:			
Masonry heater doors HBO 10, with viewing glass	10599		**753,50**

KFR 33

Set consists of:	Art.-Nr.	No.	Price
KFR 33	G033016-01	1	3909,00

Additional options			
EAS (see page 169)			2264,00
Reduced price for EAS without display			-214,50
Installation frame 2x2,5 tile -22cm	G032122		375,50
Mausi connecting piece ⌀ 130 mm	S004036		343,00

Door-version:	Art.-Nr.	No.	Price
Cast iron door inlay	C011106	1	169,50
Cast iron door inlay Assembly at the factory	C011106m	1	101,00

Energy efficiency index A +

GOT HKD 6.1 single glazing

Set consists of:	Art.-Nr.	No.	Price
Masonry heater doors HKD 6.1, single glazing		1	
Door frame		1	
Mounting console		1	

Additional options			
EAS (see page 169)			2264,00
Reduced price for EAS without display			-214,50
Conversion kit LH door	900110		69,00
Double glazing			0,00

Available variants:

Front variants:				
Door frame, black		SET208687		**2540,50**
Door frame, stainless steel		SET208688		**2626,50**
Cast iron frame, black		SET208689		**2560,00**

GOT HKD 6.1 single glazing + GOF 37x37

Set consists of:	Art.-Nr.	No.	Price
Masonry heater doors HKD 6.1, single glazing		1	
Door frame		1	
GOF 37 x 37 with support frame		1	
Combustion chamber mortar FM 1300, bucket 10 kg		1	
Adhesive and plastering mortars Universal 600, 20 kg		1	
High temperature sealing paste cartridge 310 ml		2	

Additional options			
EAS (see page 169)			2264,00
Reduced price for EAS without display			-214,50
Conversion kit LH door	900110		69,00
Double glazing			0,00
MSS connecting block / GOF top cover	G013196		229,00
MSS connecting block / GOF side/back wall	G015107		180,00
Mausi connecting piece ⌀ 180 mm	S004035		343,00

Available variants:

Front variants:				
Door frame, black		SET208622		**5242,50**
Door frame, stainless steel		SET208623		**5329,00**
Cast iron frame, black		SET208624		**5262,00**

Energy efficiency index A +

GOT HKD 6.1 cast iron doors

Set consists of:	Art.-Nr.	No.	Price
Masonry heater doors HKD 6.1, cast iron doors		1	
Door frame		1	
Mounting console		1	

Additional options			
EAS (see page 169)			2264,00
Reduced price for EAS without display			-214,50
Conversion kit LH door	900110		69,00

Available variants:

Front variants:				
Cast iron frame, black		SET208692		**2560,00**

GOT HKD 6.1 cast iron doors + GOF 37x37

Set consists of:	Art.-Nr.	No.	Price
Masonry heater doors HKD 6.1, cast iron doors		1	
Door frame		1	
GOF 37 x 37 with support frame		1	
Combustion chamber mortar FM 1300, bucket 10 kg		1	
Adhesive and plastering mortars Universal 600, 20 kg		1	
High temperature sealing paste cartridge 310 ml		2	

Additional options			
EAS (see page 169)			2264,00
Reduced price for EAS without display			-214,50
Conversion kit LH door	900110		69,00
MSS connecting block / GOF top cover	G013196		229,00
MSS connecting block / GOF side/back wall	G015107		180,00
Mausi connecting piece ⌀ 180 mm	S004035		343,00

Available variants:

Front variants				
Cast iron frame, black		SET208654		**5262,00**

Energy efficiency index A +

GOT HKD 5.1/12 single glazing

Set consists of:	Art.-Nr.	No.	Price
Masonry heater doors HKD 5.1/12 , single glazing		1	
Door frame, mounting frame, or front plate		1	
Mounting console		1	

Additional options			
EAS (see page 169)			2264,00
Reduced price for EAS without display			-214,50
Conversion kit LH door	900110		69,00
Double glazing			0,00

Available variants:

Front variants:				
Door frame, black		SET208675		**2758,50**
Door frame, stainless steel		SET208676		**2871,50**
Mounting frame, black		SET208747		**2816,50**
Cast iron frame, black		SET208677		**2792,00**

GOT HKD 5.1/12 single glazing + GOF 37x37

Set consists of:	Art.-Nr.	No.	Price
Masonry heater doors HKD 5.1/12, single glazing		1	
Door frame, mounting frame, or front plate		1	
GOF 37 x 37 with support frame		1	
Combustion chamber mortar FM 1300, bucket 10 kg		1	
Adhesive and plastering mortars Universal 600, 20 kg		1	
High temperature sealing paste cartridge 310 ml		2	

Additional options			
EAS (see page 169)			2264,00
Reduced price for EAS without display			-214,50
Conversion kit LH door	900110		69,00
Double glazing			0,00
MSS connecting block / GOF top cover	G013196		229,00
MSS connecting block / GOF side/back wall	G015107		180,00
Mausi connecting piece ⌀ 180 mm	S004035		343,00

Available variants:

Front variants:				
Door frame, black		SET208625		**5460,50**
Door frame, stainless steel		SET208626		**5574,00**
Mounting frame, black		SET208731		**5518,50**
Cast iron frame, black		SET208627		**5494,00**

Energy efficiency index A +

GOT HKD 5.1/12 cast iron doors

Set consists of:	Art.-Nr.	No.	Price
Masonry heater doors HKD 5.1/12, cast iron doors		1	
Door frame or mounting frame		1	
Mounting console		1	

Additional options			
EAS (see page 169)			2264,00
Reduced price for EAS without display			-214,50
Conversion kit LH door	900110		69,00

Available variants:

Front variants:				
Cast iron frame, black		SET208680		**2792,00**

GOT HKD 5.1/12 cast iron doors + GOF 37x37

Set consists of:	Art.-Nr.	No.	Price
Masonry heater doors HKD 5.1/12, cast iron doors		1	
Door frame or mounting frame		1	
GOF 37 x 37 with support frame		1	
Combustion chamber mortar FM 1300, bucket 10 kg		1	
Adhesive and plastering mortars Universal 600, 20 kg		1	
High temperature sealing paste cartridge 310 ml		2	

Additional options			
EAS (see page 169)			2264,00
Reduced price for EAS without display			-214,50
Conversion kit LH door	900110		69,00
MSS connecting block / GOF top cover	G013196		229,00
MSS connecting block / GOF side/back wall	G015107		180,00
Mausi connecting piece ⌀ 180 mm	S004035		343,00

Available variants:

Front variants				
Door frame		SET208657		**5494,00**

Energy efficiency index A +

GOT HKD 5.1/20 single glazing

Set consists of:	Art.-Nr.	No.	Price
Masonry heater doors HKD 5.1/20, single glazing		1	
Door frame, mounting frame, or front plate		1	
Mounting console		1	

Additional options			
EAS (see page 169)			2264,00
Reduced price for EAS without display			-214,50
Conversion kit LH door	900110		69,00
Double glazing			0,00

Available variants:

Front variants:				
Door frame, black		SET208681		**2758,50**
Door frame, stainless steel		SET208682		**2871,50**
Mounting frame, black		SET208751		**2816,50**
Cast iron frame, black		SET208683		**2792,00**

GOT 44/55 flat double glazing

Set consists of:	Art.-Nr.	No.	Price
Masonry heater doors 44/55 flat, double glazing		1	
Door frame		1	
Mounting console		1	

Additional options			
EAS (see page 169)			2264,00
Reduced price for EAS without display			-214,50
Conversion kit LH door	900112		77,00

Available variants:

Front variants:				
Door frame, black		SET208693		**3094,50**

GOT 51/67-ZL side-opening door

Set consists of:	Art.-Nr.	No.	Price
GOT 51/67-ZL side-opening door, single glazing		1	
Door frame		1	

Additional options			
EAS (see page 169)			2264,00
Reduced price for EAS without display			-214,50
Conversion kit right hinge door	02380		193,00
Door bricks GOT 51/67-ZL	G015020		487,00
Air connecting piece ⌀ 160 mm	I046109		76,00
Air connecting piece ⌀ 125 mm	02333		42,00
Double glazing			419,00

Available variants:

Front variants:				
Door frame, black		SET208701		**3857,00**

GOT 51/67-ZL side-opening door + GOF 66x42

Set consists of:	Art.-Nr.	No.	Price
GOT 51/67-ZL side-opening door, single glazing		1	
Door frame		1	
GOF 66x42		1	
Combustion chamber mortar FM 1300, bucket 10 kg		1	
Adhesive and plastering mortars Universal 600, 20 kg		1	
High temperature sealing paste cartridge 310 ml		2	

Additional options			
EAS (see page 169)			2264,00
Reduced price for EAS without display			-214,50
Conversion kit right hinge door	02380		193,00
MSS connecting block / GOF top cover	G013196		229,00
MSS connecting block / GOF side/back wall	G015107		180,00
Double glazing			419,00
Mausi connecting piece ⌀ 180 mm	S004035		343,00

Available variants:

Front variants:			
Door frame, black	SET208715		**7475,00**

Energy efficiency index A +

GOT 52/37-ZL side-opening door

Set consists of:	Art.-Nr.	No.	Price
GOT 52/37-ZL side-opening door, single glazing		1	
Door frame		1	

Additional options			
EAS (see page 169)			2264,00
Reduced price for EAS without display			-214,50
Door bricks GOT 52/37-ZL	G019077		372,50
Air connecting piece ⌀ 160 mm	I046109		76,00
Air connecting piece ⌀ 125 mm	02333		42,00
Double glazing			232,00

Available variants:

Front variants:				
Door frame, black		SET208697		**2932,50**

GOT 52/37-ZL side-opening door + GOF 37x42

Set consists of:	Art.-Nr.	No.	Price
GOT 52/37-ZL side-opening door, single glazing		1	
Door frame		1	
GOF 37x42		1	
Combustion chamber mortar FM 1300, bucket 10 kg		1	
Adhesive and plastering mortars Universal 600, 20 kg		1	
High temperature sealing paste cartridge 310 ml		2	

Additional options			
EAS (see page 169)			2264,00
Reduced price for EAS without display			-214,50
MSS connecting block / GOF top cover	G013196		229,00
MSS connecting block / GOF side/back wall	G015107		180,00
Double glazing			232,00
Mausi connecting piece ⌀ 180 mm	S004035		343,00

Available variants:

Front variants:				
Door frame, black		SET208709		**5929,00**

Energy efficiency index A +

GOT 51/67-ZL 2 side-opening doors + GOF Tunnel 66x36

Set consists of:	Art.-Nr.	No.	Price
GOT 51/67-ZL side-opening door, single glazing		2	
Door frame		2	
GOF-Tunnel 66x36		1	
Combustion chamber mortar FM 1300, bucket 10 kg		1	
Adhesive and plastering mortars Universal 600, 20 kg		1	
High temperature sealing paste cartridge 310 ml		2	

Additional options			
EAS (see page 169)			2474,50
Reduced price for EAS without display			-214,50
Conversion kit right hinge door	02380		193,00
Door lock as revision handle	02426		188,50
MSS connecting block / GOF top cover	G017110		209,50
MSS connecting block / GOF side	G015108		180,00
Double glazing (also one side only available on request)			838,00
Mausi connecting piece ⌀ 180 mm	S004035		343,00

Available variants:

Front variants:				
Door frame, black		SET210504		**11476,00**

Energy efficiency index A +

GOT 51/52/52-ZL side-opening door

Set consists of:	Art.-Nr.	No.	Price
GOT 51/52/52-ZL, single glazing two-piece ceramic glass		1	
Door frame		1	

Additional options			
EAS (see page 169)			2264,00
Reduced price for EAS without display			-214,50
Conversion kit right hinge door	02380		193,00
Door bricks GOT 51/52/52-ZL	G018032		487,00
Air connecting piece ⌀ 160 mm	I046109		76,00
Air connecting piece ⌀ 125 mm	02333		42,00

Available variants:

Front variants:				
Door frame, black		SET208707		**5539,00**

GOT 51/52/52-ZL side-opening door + GOF 35x35

Set consists of:	Art.-Nr.	No.	Price
GOT 51/52/52-ZL, single glazing two-piece ceramic glass		1	
Door frame		1	
GOF 35x35		1	
Combustion chamber mortar FM 1300, bucket 10 kg		1	
Adhesive and plastering mortars Universal 600, 20 kg		1	
High temperature sealing paste cartridge 310 ml		2	

Additional options			
EAS (see page 169)			2264,00
Reduced price for EAS without display			-214,50
Conversion kit right hinge door	02380		193,00
MSS connecting block / GOF top cover	G021138		209,50
MSS connecting block / GOF right side	G023205		180,00
MSS connecting block / GOF left side	G023204		180,00
Mausi connecting piece ⌀ 180 mm	S004035		343,00

Available variants:

Front variants:				
Door frame, black		SET208719		**7873,00**

Energy efficiency index A +

GOT 45/67/44-ZL side-opening door L

Set consists of:	Art.-Nr.	No.	Price
GOT 45/67/44-ZL L, single glazing two-piece ceramic glass		1	
Door frame		1	

Additional options			
EAS (see page 169)			2264,00
Reduced price for EAS without display			-214,50
Door bricks GOT 45/67/44-ZL L	G025053		577,00
Air connecting piece ⌀ 160 mm	I046109		76,00
Air connecting piece ⌀ 125 mm	02333		42,00

Available variants:

Front variants:				
Door frame, black		SET210924		**6106,00**

GOT 45/67/44-ZL side-opening door L + GOF 50x35

Set consists of:	Art.-Nr.	No.	Price
GOT 45/67/44-ZL L, single glazing two-piece ceramic glass		1	
Door frame		1	
GOF-Tunnel 50x35		1	
Combustion chamber mortar FM 1300, bucket 10 kg		1	
Adhesive and plastering mortars Universal 600, 20 kg		1	
High temperature sealing paste cartridge 310 ml		2	

Additional options			
EAS (see page 169)			2264,00
Reduced price for EAS without display			-214,50
MSS connecting block / GOF top cover	G021138		209,50
MSS connecting block / GOF right side	G023205		180,00
MSS connecting block GOF backwall	G015107		180,00
Mausi connecting piece ⌀ 180 mm	S004035		343,00

Available variants:

Front variants:				
Door frame, black		SET210928		**9275,50**

Energy efficiency index A +

GOT 45/67/44-ZL lifting door L

Set consists of:	Art.-Nr.	No.	Price
GOT 45/67/44-ZL STL, single glazing two-piece ceramic glass		1	
Mounting frame		1	

Additional options			
EAS (see page 169)			2264,00
Reduced price for EAS without display			-214,50
Door bricks GOT 45/67/44-ZL L	G025053		577,00
Air connecting piece ⌀ 160 mm	I046109		76,00
Air connecting piece ⌀ 125 mm	02333		42,00
Counterweights for non-self closing door	49097		67,50

Available variants:

Front variants:				
Mounting frame, black 50 mm		G025093-11		**6761,50**

GOT 45/67/44-ZL lifting door L + GOF 50x35

Set consists of:	Art.-Nr.	No.	Price
GOT 45/67/44-ZL STL, single glazing two-piece ceramic glass		1	
Mounting frame		1	
GOF 50x35		1	
Combustion chamber mortar FM 1300, bucket 10 kg		1	
Adhesive and plastering mortars Universal 600, 20 kg		1	
High temperature sealing paste cartridge 310 ml		2	

Additional options			
EAS (see page 169)			2264,00
Reduced price for EAS without display			-214,50
MSS connecting block / GOF top cover	G021138		209,50
MSS connecting block / GOF right side	G023205		180,00
MSS connecting block GOF backwall	G015107		180,00
Mausi connecting piece ⌀ 180 mm	S004035		343,00
Counterweights for non-self closing door	49097		67,50

Available variants:

Front variants:				
Mounting frame, black 50 mm		G025094-11		**9886,00**

Energy efficiency index A +

GOT 45/67/44-ZL side-opening door R

Set consists of:	Art.-Nr.	No.	Price
GOT 45/67/44-ZL R, single glazing two-piece ceramic glass		1	
Door frame		1	

Additional options			
EAS (see page 169)			2264,00
Reduced price for EAS without display			-214,50
Door bricks GOT 45/67/44-ZL R	G025026		577,00
Air connecting piece ⌀ 160 mm	I046109		76,00
Air connecting piece ⌀ 125 mm	02333		42,00

Available variants:

Front variants:				
Door frame, black		set210922		**6106,00**

GOT 45/67/44-ZL side-opening door R + GOF 50x35

Set consists of:	Art.-Nr.	No.	Price
GOT 45/67/44-ZL R, single glazing two-piece ceramic glass		1	
Door frame		1	
GOF 50x35		1	
Combustion chamber mortar FM 1300, bucket 10 kg		1	
Adhesive and plastering mortars Universal 600, 20 kg		1	
High temperature sealing paste cartridge 310 ml		2	

Additional options			
EAS (see page 169)			2264,00
Reduced price for EAS without display			-214,50
MSS connecting block / GOF top cover	G021138		209,50
MSS connecting block / GOF left side	G023204		180,00
MSS connecting block GOF backwall	G015107		180,00
Mausi connecting piece ⌀ 180 mm	S004035		343,00

Available variants:

Front variants:				
Door frame, black		SET210926		**9275,50**

Energy efficiency index A +

GOT 45/67/44-ZL lifting door R

Set consists of:	Art.-Nr.	No.	Price
GOT 45/67/44-ZL STR, single glazing two-piece ceramic glass		1	
Mounting frame		1	

Additional options			
EAS (see page 169)			2264,00
Reduced price for EAS without display			-214,50
Door bricks GOT 45/67/44-ZL R	G025026		577,00
Air connecting piece ⌀ 160 mm	I046109		76,00
Air connecting piece ⌀ 125 mm	02333		42,00
Counterweights for non-self closing door	49097		67,50

Available variants:

Front variants:				
Mounting frame, black 50 mm		G025058-11		**6761,50**

GOT 45/67/44-ZL lifting door R + GOF 50x35

Set consists of:	Art.-Nr.	No.	Price
GOT 45/67/44-ZL STR, single glazing two-piece ceramic glass		1	
Mounting frame		1	
GOF 50x35		1	
Combustion chamber mortar FM 1300, bucket 10 kg		1	
Adhesive and plastering mortars Universal 600, 20 kg		1	
High temperature sealing paste cartridge 310 ml		2	

Additional options			
EAS (see page 169)			2264,00
Reduced price for EAS without display			-214,50
MSS connecting block / GOF top cover	G021138		209,50
MSS connecting block / GOF left side	G023204		180,00
MSS connecting block GOF backwall	G015107		180,00
Mausi connecting piece ⌀ 180 mm	S004035		343,00
Counterweights for non-self closing door	49097		67,50

Available variants:

Front variants:				
Mounting frame, black 50 mm		G025088-11		**9886,00**

Energy efficiency index A +

Glazing formats

Flat glazing

from page 190

KSO 33q

Door dimensions height x width in cm

Round glazing

from page 192

KSO 33r

Door dimensions height x width in cm

Mounting frame- Accumulation stove

Mounting frame

Supplementary equipment

EAS Combustion controls with potential-free relay (without additional functions) consisting of display, 1 x flush-mount box, door switch, thermocouple & bus line, each 2 m long. Preassembled EAS/EOS components, door switch, thermocouple, motor box with transmission and ø 125 mm air flap, flexible hose with adjustable clamps

EOS Combustion control with graphic touchscreen display and additional functions (differential temperature control, Moritz's flap control) consisting of: Display with control unit, 2 x flush-mount box, door switch, thermocouple, bus and connecting line, each 2 m long, 4 x water sensors with immersion sleeve and 2x extension cable 3 m. Preassembled EOS components: door switch, thermocouple, motor box with transmission and ø 125 mm air flap, flexible hose with adjustable clamps

KSO 33q, with thermal concrete cladding

Set consists of:	Art.-Nr.	No.	Price
Accumulation stove KSO 33q, horizontal outlet		1	
Firebox KSO 33 ⌀ 540 mm		1	
Top-mount accumulator KSO 33 ⌀ 540 mm		1	
Front with doors (44 x 33), flat glass		1	
KSO 33 Firebox support frame		1	
High temperature sealing paste		1	
Mounting frame according table		1	
Smoke pipe connection ⌀ 130 mm, horizontal		1	
Cover for smoke pipe connecting piece ⌀ 130 mm, horizontal		1	
Thermal concrete cladding		1	

Additional options			
Conversion kit for vertical outlet instead of horizontal smoke pipe connection (G022158) a vertical smoke pipe connection (G020405) is delivered			0,00
Conversion kit LH door	900110		69,00

Available variants:

Front variants				
Mounting frame, black		SET211386		**9199,00**

Energy efficiency index A +

KSO 33q, with thermal concrete cladding + EAS

Set consists of:	Art.-Nr.	No.	Price
Accumulation stove KSO 33q, horizontal outlet		1	
Firebox KSO 33 ⌀ 540 mm		1	
Top-mount accumulator KSO 33 ⌀ 540 mm		1	
Front with doors (44 x 33), flat glass		1	
KSO 33 Firebox support frame		1	
High temperature sealing paste		1	
Mounting frame according table		1	
Smoke pipe connection ⌀ 130 mm, horizontal		1	
Cover for smoke pipe connecting piece ⌀ 130 mm, horizontal		1	
Thermal concrete cladding		1	
EAS (see page 189)		1	
Mounting box		1	
Door switch wiring 3 lm		1	
Thermocouple wiring 3 lm		1	
Bus wiring 3 lm		1	

Additional options			
Conversion kit for vertical outlet instead of horizontal smoke pipe connection (G022158) a vertical smoke pipe connection (G020405) is delivered			0,00
Conversion kit LH door	900110		69,00
Reduced price for EAS without display			-214,50

Available variants:

Front variants				
Mounting frame, black		SET211388		**11500,00**

Energy efficiency index A +

KSO 33r, with thermal concrete cladding

Set consists of:	Art.-Nr.	No.	Price
Accumulation stove KSO 33r, horizontal outlet		1	
Firebox KSO 33 ⌀ 540 mm		1	
Top-mount accumulator KSO 33 ⌀ 540 mm		1	
Front with doors (44 x 33), round glass		1	
KSO 33 Firebox support frame		1	
High temperature sealing paste		1	
Mounting frame according table		1	
Smoke pipe connection ⌀ 130 mm, horizontal		1	
Cover for smoke pipe connecting piece ⌀ 130 mm, horizontal		1	
Thermal concrete cladding		1	

Additional options			
Conversion kit for vertical outlet instead of horizontal smoke pipe connection (G022158) a vertical smoke pipe connection (G020405) is delivered instead cover for horizontal smoke pipe connection (G020416) delivery contains a vertical smoke pipe connection (G020418)			0,00
Conversion kit LH door	900110		69,00

Available variants:

Front variants				
Mounting frame, black, 330 mm		SET211394		**9076,50**

Energy efficiency index A +

KSO 33r, with thermal concrete cladding + EAS

Set consists of:	Art.-Nr.	No.	Price
Accumulation stove KSO 33r, horizontal outlet		1	
Firebox KSO 33 ⌀ 540 mm		1	
Top-mount accumulator KSO 33 ⌀ 540 mm		1	
Front with doors (44 x 33), round glass		1	
KSO 33 Firebox support frame		1	
High temperature sealing paste		1	
Mounting frame according table		1	
Smoke pipe connection ⌀ 130 mm, horizontal		1	
Cover for smoke pipe connecting piece ⌀ 130 mm, horizontal		1	
Thermal concrete cladding		1	
EAS (see page 189)		1	
Mounting box		1	
Door switch wiring 3 lm		1	
Thermocouple wiring 3 lm		1	
Bus wiring 3 lm		1	

Additional options			
Conversion kit for vertical outlet instead of horizontal smoke pipe connection (G022158) a vertical smoke pipe connection (G020405) is delivered instead cover for horizontal smoke pipe connection (G020416) delivery contains a vertical smoke pipe connection (G020418)			0,00
Conversion kit LH door	900110		69,00
Reduced price for EAS without display			-214,50

Available variants:

Front variants				
Mounting frame, black, 330 mm		SET211396		**11377,50**

Energy efficiency index A +

Glazing formats

Flat glazing

from page 196

BSO 02, 03, 04, 06
Door dimensions height x width in cm

BSO 05

Tunnel formats

from page 206

BSO 02, 03, 06
Door dimensions height x width in cm

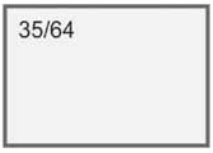

BSO 05

Round glazing

from page 214

BSO 1

Door dimensions height x width in cm

Mounting frame- System stoves

Mounting frame

Supplementary equipment

EAS Combustion controls with potential-free relay (without additional functions) consisting of display, 1 x flush-mount box, door switch, thermocouple & bus line, each 2 m long. Preassembled EAS/EOS components, door switch, thermocouple, motor box with transmission and ø 125 mm air flap, flexible hose with adjustable clamps

EOS Combustion control with graphic touchscreen display and additional functions (differential temperature control, Moritz's flap control) consisting of: Display with control unit, 2 x flush-mount box, door switch, thermocouple, bus and connecting line, each 2 m long, 4 x water sensors with immersion sleeve and 2x extension cable 3 m. Preassembled EOS components: door switch, thermocouple, motor box with transmission and ø 125 mm air flap, flexible hose with adjustable clamps

BSO 02

Set consists of:	Art.-Nr.	No.	Price
HKD 2.2, side-opening door, single glazed		1	
Chamotte lining set HKD 2.2		1	
Upper lining HKD 2.2		1	
Mounting frame		1	
Modular top-mount accumulator		5	
Cast iron dome MAS ⌀ 180 horizontal/ vertical		1	
Mounting ring for modular top-mount storage		1	
Thermal concrete cladding BSO 02		1	

Additional options			
Additional ring (top ring 1), raised cladding for BSO 02 (326 mm) *	BSO2000-006		330,50
* Differences of colour between the height extension ring and other components of BSK/BSO are due to manufacturing process and cannot be excluded. These colour differences are no reason for a claim.			
Double glazing			232,00
Heat protective panel BSO 02 (suitable for back wall or side wall)	BSO3000-034		120,50
Door handle black	02056-01		130,50

Available variants:

Front variants				
Mounting frame, black		SET211302		**8574,00**
Mounting frame, stainless steel		SET211303		**8733,50**

Energy efficiency index A +

BSO 02 + EAS

Set consists of:	Art.-Nr.	No.	Price
HKD 2.2, side-opening door, single glazed		1	
Chamotte lining set HKD 2.2		1	
Upper lining HKD 2.2		1	
Mounting frame		1	
Modular top-mount accumulator		5	
Cast iron dome MAS ⌀ 180 horizontal/ vertical		1	
Mounting ring for modular top-mount storage		1	
Thermal concrete cladding BSO 02		1	
EAS (see page 189)		1	
Mounting box		1	
Door switch wiring 3 lm		1	
Thermocouple wiring 3 lm		1	
Bus wiring 3 lm		1	

Additional options			
Additional ring (top ring 1), raised cladding for BSO 02 (326 mm) *	BSO2000-006		330,50
* Differences of colour between the height extension ring and other components of BSK/BSO are due to manufacturing process and cannot be excluded. These colour differences are no reason for a claim.			
Double glazing			232,00
Heat protective panel BSO 02 (suitable for back wall or side wall)	BSO3000-034		120,50
Reduced price for EAS without display			-214,50
Air flap adapter ⌀ 125 mm for direct assembly motor at device	N003156		35,00
Door handle black	02056-01		130,50

Available variants:

Front variants				
Mounting frame, black		SET211316		**10875,00**
Mounting frame, stainless steel		SET211317		**11034,50**

Energy efficiency index A +

BSO 03

Set consists of:	Art.-Nr.	No.	Price
HKD 2.2, side-opening door, single glazed		1	
Chamotte lining set HKD 2.2		1	
Upper lining HKD 2.2		1	
Mounting frame		1	
heat storage block BSO 03		1	
Segmental bend 45°		1	
Pipe conversion piece ⌀ 180 mm, 90° assembly kit		1	
Thermal concrete cladding BSO 02		1	
Thermal concrete cladding heat storage block		1	

Additional options			
Additional ring (top ring 1); raised cladding for BSO 03 storage block (290 mm high) *	BSO3000-004		321,00
Additional ring (top ring 1), raised cladding for BSO 02 (326 mm) *	BSO2000-006		330,50
* Differences of colour between the height extension ring and other components of BSK/BSO are due to manufacturing process and cannot be excluded. These colour differences are no reason for a claim.			
Double glazing			232,00
Heat protective panel BSO 03 (suitable for side-wall/ Heat protective panel backwall included in delivery contents)	BSO3000-034		120,50
Door handle black	02056-01		130,50

Available variants:

Front variants				
Mounting frame, black		SET211308		**11405,50**
Mounting frame, stainless steel		SET211309		**11565,00**

Energy efficiency index A +

BSO 03 + EAS

Set consists of:	Art.-Nr.	No.	Price
HKD 2.2, side-opening door, single glazed		1	
Chamotte lining set HKD 2.2		1	
Upper lining HKD 2.2		1	
Mounting frame		1	
heat storage block BSO 03		1	
Segmental bend 45°		1	
Pipe conversion piece ⌀ 180 mm, 90 ° assembly kit		1	
Thermal concrete cladding BSO 02		1	
Thermal concrete cladding heat storage block		1	
EAS (see page 189)		1	
Mounting box		1	
Door switch wiring 3 lm		1	
Thermocouple wiring 3 lm		1	
Bus wiring 3 lm		1	

Additional options			
Additional ring (top ring 1) raised cladding for BSO 03 storage block (290 mm high) *	BSO3000-004		321,00
Additional ring (top ring 1); raised cladding for BSO 02 (326 mm) *	BSO2000-006		330,50
* Differences of colour between the height extension ring and other components of BSK/BSO are due to manufacturing process and cannot be excluded. These colour differences are no reason for a claim.			
Double glazing			232,00
Heat protective panel BSO 03 (suitable for side-wall/ Heat protective panel backwall included in delivery contents)	BSO3000-034		120,50
Reduced price for EAS without display			-214,50
Air flap adapter ⌀ 125 mm for direct assembly motor at device	N003156		35,00
Door handle black	02056-01		130,50

Available variants:

Front variants				
Mounting frame, black		SET211322		**13707,00**
Mounting frame, stainless steel		SET211323		**13866,50**

Energy efficiency index A +

BSO 04

Set consists of:	Art.-Nr.	No.	Price
HKD 2.2 k SK, side-opening door, single glazed		1	
Chamotte lining set HKD 2.2 k SK		1	
Upper lining HKD 2.2 k SK		1	
Mounting frame		1	
Thermal concrete cladding BSO 04		1	

Additional options			
Additional ring (top ring 1), Raised cladding for BSO 04 (412 mm) *	BSO4000-006		546,00
* Differences of colour between the height extension ring and other components of BSK/BSO are due to manufacturing process and cannot be excluded. These colour differences are no reason for a claim.			
Double glazing			232,00
Set heat-protective panel	BSK12000-124		63,00
Door handle black	02056-01		130,50

Available variants:

Front variants				
Mounting frame, black		SET211470		**9261,00**
Mounting frame, stainless steel		SET211471		**9420,50**

Energy efficiency index A +

BSO 04 + EAS

Set consists of:	Art.-Nr.	No.	Price
HKD 2.2 k SK, side-opening door, single glazed		1	
Chamotte lining set HKD 2.2 k SK		1	
Upper lining HKD 2.2 k SK		1	
Mounting frame		1	
Thermal concrete cladding BSO 04		1	
EAS (see page 189)		1	
Mounting box		1	
Door switch wiring 2 lm		1	
Thermocouple wiring 2 lm		1	
Bus wiring 2 lm		1	

Additional options			
Reduced price for EAS without display			-214,50
Additional ring (top ring 1), Raised cladding for BSO 04 (412 mm) *	BSO4000-006		546,00
* Differences of colour between the height extension ring and other components of BSK/BSO are due to manufacturing process and cannot be excluded. These colour differences are no reason for a claim.			
Double glazing			232,00
Set heat-protective panel	BSK12000-124		63,00
Add. charge EOS [1]			1838,00
Air flap adapter ⌀ 125 mm for direct assembly motor at device	N003156		35,00
Door handle black	02056-01		130,50

Available variants:

Front variants				
Mounting frame, black		SET211473		**11525,50**
Mounting frame, stainless steel		SET211474		**11685,00**

[1]compared to EAS: EOS control & display unit, second flush-mount box, connecting cable for control & display unit 2m long, 4x water temperature sensor with sleeve and 2x extension cable 3m long.

Energy efficiency index A +

BSO 06 + EAS

Set consists of:	Art.-Nr.	No.	Price
HKD 2.2 SK, side-opening door, single glazed		1	
Chamotte lining set HKD 2.2 SK		1	
Upper lining HKD 2.2 SK		1	
Mounting frame		1	
Thermal concrete cladding BSO 06		1	
EAS (see page 189)		1	
Mounting box		1	
Door switch wiring 2 lm		1	
Thermocouple wiring 2 lm		1	
Bus wiring 2 lm		1	
Connecting piece for side/rear smoke outlet ⌀ 180 mm		1	

Additional options			
Reduced price for EAS without display			-214,50
Additional ring (top ring 1), Raising the BSO 06 (410 mm) *	BSO6000-006		420,50
* Differences of colour between the height extension ring and other components of BSK/BSO are due to manufacturing process and cannot be excluded. These colour differences are no reason for a claim.			
Double glazing			232,00
Set heat-protective panel	BSO6000-121		87,00
Smoke pipe outlet on top ⌀ 180 mm	W043140		0,00
Conversion kit for cleaning on top including push-in handle	BSO5000-123		307,50
Air flap adapter ⌀ 125 mm for direct assembly motor at device	N003156		35,00
Door handle black	02056-01		130,50

Available variants:

Front variants				
Mounting frame, black		SET213343		**16691,50**

[1]compared to EAS: EOS control & display unit, second flush-mount box, connecting cable for control & display unit 2m long, 4x water temperature sensor with sleeve and 2x extension cable 3m long.

Energy efficiency index A +

BSO 06 + EOS

Set consists of:	Art.-Nr.	No.	Price
HKD 2.2 SK, side-opening door, single glazed		1	
Chamotte lining set HKD 2.2 SK		1	
Upper lining HKD 2.2 SK		1	
Mounting frame		1	
Thermal concrete cladding BSO 06		1	
EOS (see page 389)		1	
Mounting box		2	
Door switch wiring 2 lm		1	
Thermocouple wiring 2 lm		1	
Bus wiring 2 lm		1	
Connecting piece for side/rear smoke outlet ⌀ 180 mm		1	
Connection wiring EOS display - control unit - 2 lm		1	
Temperature sensor with immersion sleeve		4	
Extension wiring for temperature sensor 3 lm		2	

Additional options			
Additional ring (top ring 1), Raising the BSO 06 (410 mm) *	BSO6000-006		420,50
* Differences of colour between the height extension ring and other components of BSK/BSO are due to manufacturing process and cannot be excluded. These colour differences are no reason for a claim.			
Double glazing			232,00
Set heat-protective panel	BSO6000-121		87,00
Smoke pipe outlet on top ⌀ 180 mm	W043140		0,00
Conversion kit for cleaning on top including push-in handle	BSO5000-123		307,50
Air flap adapter ⌀ 125 mm for direct assembly motor at device	N003156		35,00
Door handle black	02056-01		130,50

Available variants:

Front variants				
Mounting frame, black		SET213383		**18529,50**

Energy efficiency index A +

BSO 05 + EAS

Set consists of:	Art.-Nr.	No.	Price
HKD 7 SK, side-opening door, single glazed		1	
Chamotte lining set HKD 7 SK		1	
Upper lining HKD 7 SK		1	
Mounting frame		1	
Thermal concrete cladding BSO 05		1	
EAS (see page 189)		1	
Mounting box		1	
Door switch wiring 2 lm		1	
Thermocouple wiring 2 lm		1	
Bus wiring 2 lm		1	
Connecting piece for side/rear smoke outlet ⌀ 180 mm		1	

Additional options			
Reduced price for EAS without display			-214,50
Additional ring (top ring 1), Extending element for BSO 05 (312 mm) *	BSO5000-007		442,50
* Differences of colour between the height extension ring and other components of BSK/BSO are due to manufacturing process and cannot be excluded. These colour differences are no reason for a claim.			
Double glazing			232,00
Set heat-protective panel	BSO5000-120		79,00
Add. charge EOS [1]			1838,00
Smoke pipe outlet on top ⌀ 180 mm	W043140		0,00
Conversion kit for cleaning on top including push-in handle	BSO5000-123		307,50
Air flap adapter ⌀ 125 mm for direct assembly motor at device	N003156		35,00
Door handle black	02056-01		130,50

Available variants:

Front variants				
Mounting frame, black		SET213016		**18582,00**

[1]compared to EAS: EOS control & display unit, second flush-mount box, connecting cable for control & display unit 2m long, 4x water temperature sensor with sleeve and 2x extension cable 3m long.

Energy efficiency index A +

BSO 02 Tunnel

Set consists of:	Art.-Nr.	No.	Price
HKD 2.2 Tunnel, 2 side-opening doors, single glazed		1	
Chamotte lining set HKD 2.2 Tunnel		1	
Upper lining HKD 2.2 für BSO 02		1	
Mounting frame		2	
Modular top-mount accumulator		5	
Cast iron dome MAS ⌀ 180 horizontal/ vertical		1	
Mounting ring for modular top-mount storage		1	
Thermal concrete cladding BSO 02		1	

Additional options			
Additional ring (top ring 1), raised cladding for BSO 02 (326 mm) *	BSO2000-006		330,50
* Differences of colour between the height extension ring and other components of BSK/BSO are due to manufacturing process and cannot be excluded. These colour differences are no reason for a claim.			
Door lock as revision handle	02429		101,50
Double glazing (also one side only available on request)			464,00
Heat protective panel BSO 02 (sidewall)	BSO3000-034		120,50
Door handle black	02056-01		130,50

Available variants:

Front variants				
Mounting frame, black		SET211305		**10058,00**
Mounting frame, stainless steel		SET211306		**10377,00**

Energy efficiency index A +

BSO 02 Tunnel + EAS

Set consists of:	Art.-Nr.	No.	Price
HKD 2.2 Tunnel , 2 side-opening doors, single glazed		1	
Chamotte lining set HKD 2.2 Tunnel		1	
Upper lining HKD 2.2 für BSO 02		1	
Mounting frame		2	
Modular top-mount accumulator		5	
Cast iron dome MAS ⌀ 180 horizontal/ vertical		1	
Mounting ring for modular top-mount storage		1	
Thermal concrete cladding BSO 02		1	
EAS (see page 189)		1	
Mounting box		1	
Door switch wiring 3 lm		1	
Thermocouple wiring 3 lm		1	
Bus wiring 3 lm		1	

Additional options			
Additional ring (top ring 1), raised cladding for BSO 02 (326 mm) *	BSO2000-006		330,50
* Differences of colour between the height extension ring and other components of BSK/BSO are due to manufacturing process and cannot be excluded. These colour differences are no reason for a claim.			
Door lock as revision handle	02429		101,50
Double glazing			464,00
Heat protective panel BSO 02 (sidewall)	BSO3000-034		120,50
Reduced price for EAS without display			-214,50
Air flap adapter ⌀ 125 mm for direct assembly motor at device	N003156		35,00
Door handle black	02056-01		130,50

Available variants:

Front variants				
Mounting frame, black		SET211319		**12569,50**
Mounting frame, stainless steel		SET211320		**12888,50**

Energy efficiency index A +

BSO 03 Tunnel

Set consists of:	Art.-Nr.	No.	Price
HKD 2.2 Tunnel, 2 side-opening doors, single glazed		1	
Chamotte lining set HKD 2.2		1	
Upper lining HKD 2.2		1	
Mounting frame		2	
heat storage block BSO 03		1	
Segmental bend 45°		1	
Pipe conversion piece ⌀ 180 mm, 90° assembly kit		1	
Thermal concrete cladding BSO 02		1	
Thermal concrete cladding heat storage block		1	

Additional options			
Additional ring (top ring 1), raised cladding for BSO 03 storage block (290 mm high) *	BSO3000-004		321,00
Additional ring (top ring 1), raised cladding for BSO 02 (326 mm) *	BSO2000-006		330,50
* Differences of colour between the height extension ring and other components of BSK/BSO are due to manufacturing process and cannot be excluded. These colour differences are no reason for a claim.			
Double glazing			464,00
Door handle black	02056-01		130,50

Available variants:

Front variants				
Mounting frame, black		SET211311		**12890,00**
Mounting frame, stainless steel		SET211312		**13209,00**

Energy efficiency index A +

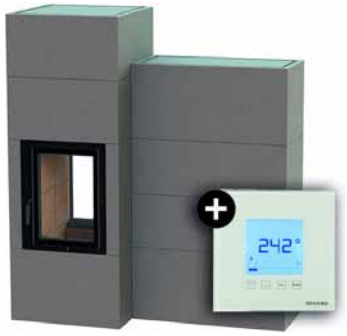

BSO 03 Tunnel + EAS

Set consists of:	Art.-Nr.	No.	Price
HKD 2.2 Tunnel, 2 side-opening doors, single glazed		1	
Chamotte lining set HKD 2.2		1	
Upper lining HKD 2.2		1	
Mounting frame		2	
heat storage block BSO 03		1	
Segmental bend 45°		1	
Pipe conversion piece ⌀ 180 mm, 90° assembly kit		1	
Thermal concrete cladding BSO 02		1	
Thermal concrete cladding heat storage block		1	
EAS (see page 189)		1	
Mounting box		1	
Door switch wiring 3 lm		1	
Thermocouple wiring 3 lm		1	
Bus wiring 3 lm		1	

Additional options			
Additional ring (top ring 1); raised cladding for BSO 03 storage block (290 mm high) *	BSO3000-004		321,00
Additional ring (top ring 1), raised cladding for BSO 02 (326 mm) *	BSO2000-006		330,50
* Differences of colour between the height extension ring and other components of BSK/BSO are due to manufacturing process and cannot be excluded. These colour differences are no reason for a claim.			
Double glazing			464,00
Reduced price for EAS without display			-214,50
Air flap adapter ⌀ 125 mm for direct assembly motor at device	N003156		35,00
Door handle black	02056-01		130,50

Available variants:

Front variants				
Mounting frame, black		SET211325		**15401,00**
Mounting frame, stainless steel		SET211326		**15720,00**

Energy efficiency index A +

BSO 06 Tunnel + EAS

Set consists of:	Art.-Nr.	No.	Price
HKD 2.2 SK Tunnel, side-opening door, single glazed		1	
Chamotte lining set HKD 2.2 SK Tunnel		1	
Upper lining HKD 2.2 SK		1	
Mounting frame		2	
Thermal concrete cladding BSO 06		1	
EAS (see page 189)		1	
Mounting box		1	
Door switch wiring 2 lm		1	
Thermocouple wiring 2 lm		1	
Bus wiring 2 lm		1	
Connecting piece for side/rear smoke outlet ⌀ 180 mm		1	

Additional options			
Reduced price for EAS without display			-214,50
Additional ring (top ring 1), Raising the BSO 06 (410 mm) *	BSO6000-006		420,50
* Differences of colour between the height extension ring and other components of BSK/BSO are due to manufacturing process and cannot be excluded. These colour differences are no reason for a claim.			
Double glazing			464,00
Smoke pipe outlet on top ⌀ 180 mm	W043140		0,00
Conversion kit for cleaning on top including push-in handle	BSO5000-123		307,50
Air flap adapter ⌀ 125 mm for direct assembly motor at device	N003156		35,00
Door handle black	02056-01		130,50

Available variants:

Front variants				
Mounting frame, black		SET213344		**18937,00**

[1]compared to EAS: EOS control & display unit, second flush-mount box, connecting cable for control & display unit 2m long, 4x water temperature sensor with sleeve and 2x extension cable 3m long.

Energy efficiency index A +

BSO 06 Tunnel + EOS

Set consists of:	Art.-Nr.	No.	Price
HKD 2.2 SK Tunnel, side-opening door, single glazed		1	
Chamotte lining set HKD 2.2 SK Tunnel		1	
Upper lining HKD 2.2 SK		1	
Mounting frame		2	
Thermal concrete cladding BSO 06		1	
EOS (see page 389)		1	
Mounting box		2	
Door switch wiring 2 lm		1	
Thermocouple wiring 2 lm		1	
Bus wiring 2 lm		1	
Connecting piece for side/rear smoke outlet ⌀ 180 mm		1	
Connection wiring EOS display - control unit - 2 lm		1	
Temperature sensor with immersion sleeve		4	
Extension wiring for temperature sensor 3 lm		2	

Additional options			
Additional ring (top ring 1), Raising the BSO 06 (410 mm) *	BSO6000-006		420,50
* Differences of colour between the height extension ring and other components of BSK/BSO are due to manufacturing process and cannot be excluded. These colour differences are no reason for a claim.			
Double glazing			464,00
Smoke pipe outlet on top ⌀ 180 mm	W043140		0,00
Conversion kit for cleaning on top including push-in handle	BSO5000-123		307,50
Air flap adapter ⌀ 125 mm for direct assembly motor at device	N003156		35,00
Door handle black	02056-01		130,50

Available variants:

Front variants				
Mounting frame, black		SET213384		**20775,00**

Energy efficiency index A +

BSO 05 Tunnel + EAS

Set consists of:	Art.-Nr.	No.	Price
HKD 7 SK Tunnel, side-opening door, single glazed		1	
Chamotte lining set HKD 7 SK Tunnel		1	
Upper lining HKD 7 SK		1	
Mounting frame		2	
Thermal concrete cladding BSO 05		1	
EAS (see page 189)		1	
Mounting box		1	
Door switch wiring 2 lm		1	
Thermocouple wiring 2 lm		1	
Bus wiring 2 lm		1	
Connecting piece for side/rear smoke outlet ⌀ 180 mm		1	

Additional options			
Reduced price for EAS without display			-214,50
Additional ring (top ring 1), Extending element for BSO 05 (312 mm) *	BSO5000-007		442,50
* Differences of colour between the height extension ring and other components of BSK/BSO are due to manufacturing process and cannot be excluded. These colour differences are no reason for a claim.			
Double glazing			464,00
Add. charge EOS [1]			1838,00
Smoke pipe outlet on top ⌀ 180 mm	W043140		0,00
Conversion kit for cleaning on top including push-in handle	BSO5000-123		307,50
Air flap adapter ⌀ 125 mm for direct assembly motor at device	N003156		35,00
Door handle black	02056-01		130,50

Available variants:

Front variants				
Mounting frame, black		SET213017		**21057,00**

[1]compared to EAS: EOS control & display unit, second flush-mount box, connecting cable for control & display unit 2m long, 4x water temperature sensor with sleeve and 2x extension cable 3m long.

Energy efficiency index A +

BSO 01

Set consists of:	Art.-Nr.	No.	Price
HKD 2.2 short, single glazed, side-opening door round		1	
Chamotte lining set HKD 2.2 short		1	
Upper lining HKD 2.2 short		1	
Mounting frame		1	
Modular top-mount accumulator		5	
Cast iron dome MAS ⌀ 180 horizontal/ vertical		1	
Mounting ring for modular top-mount storage		1	
Thermal concrete cladding BSO 01		1	

Additional options			
Additional ring (top ring 1), raised cladding for BSO 01 (330 mm) *	BSO1000-005		314,50
* Differences of colour between the height extension ring and other components of BSK/BSO are due to manufacturing process and cannot be excluded. These colour differences are no reason for a claim.			
Door handle black	02056-01		130,50

Available variants:

Front variants				
Mounting frame, black		SET211300		**9195,00**

Energy efficiency index A +

BSO 01 + EAS

Set consists of:	Art.-Nr.	No.	Price
HKD 2.2 short, single glazed, side-opening door round		1	
Chamotte lining set HKD 2.2 short		1	
Upper lining HKD 2.2 short		1	
Mounting frame		1	
Modular top-mount accumulator		5	
Cast iron dome MAS ⌀ 180 horizontal/ vertical		1	
Mounting ring for modular top-mount storage		1	
Thermal concrete cladding BSO 01		1	
EAS (see page 189)		1	
Mounting box		1	
Door switch wiring 3 lm		1	
Thermocouple wiring 3 lm		1	
Bus wiring 3 lm		1	

Additional options			
Reduced price for EAS without display			-214,50
Additional ring (top ring 1), raised cladding for BSO 01 (330 mm) *	BSO1000-005		314,50
* Differences of colour between the height extension ring and other components of BSK/BSO are due to manufacturing process and cannot be excluded. These colour differences are no reason for a claim.			
Air flap adapter ⌀ 125 mm for direct assembly motor at device	N003156		35,00
Door handle black	02056-01		130,50

Available variants:

Front variants				
Mounting frame, black		SET211314		**11496,50**

Energy efficiency index A +

Technology Sets HKD 2.2 k DR for scandinavian-CLASSIC 01 and modern ART

Set consists of:	Art.-Nr.	No.	Price
HKD 2.2 short, single glazed, side-opening door round		1	
Chamotte lining set HKD 2.2 short		1	
Upper lining HKD 2.2 short		1	
Mounting frame		1	
Support bearing		1	
Modular top-mount accumulator		5	
Cast iron dome ⌀ 160 mm		1	
Mounting ring for modular top-mount storage		1	

Available variants:

Front variants				
Mounting frame, black		SET213129		**8492,50**

Energy efficiency index A +

scandinavianCLASSIC 01	scandinavianCLASSIC 01 with crown	modernART

Ceramic variants: K&K Poker tile sets must be ordered directly from K&K Poker at info@kamnarstvi-bechyne.cz

Technology Sets HKD 2.2 k DR for scandinavian-CLASSIC 01 and modern ART with EAS

Set consists of:	Art.-Nr.	No.	Price
HKD 2.2 short, single glazed, side-opening door round for EAS		1	
Chamotte lining set HKD 2.2 short		1	
Upper lining HKD 2.2 short		1	
Mounting frame		1	
Support bearing			
Modular top-mount accumulator		5	
Cast iron dome for EAS ⌀ 160 mm		1	
Mounting ring for modular top-mount storage		1	
Mounting box		1	
EAS control unit		1	
Door switch wiring 3 lfm.		1	
Thermocouple wiring 3 lfm.		1	
Bus wiring 3 lfm.		1	
Air flap adapter ⌀ 125 mm for direct assembly motor at device		1	

Additional options			
Reduced price for EAS without display			-214,50

Available variants:

Front variants				
Mounting frame, black		SET213128		**10876,50**

Energy efficiency index A +

scandinavianCLASSIC 01	scandinavianCLASSIC 01with crown	modernART

Ceramic variants: K&K Poker tile sets must be ordered directly from K&K Poker at info@kamnarstvi-bechyne.cz

Glazing formats

Flat glazing

from page 222

Door dimensions height x width in cm

Tunnel formats

from page 230

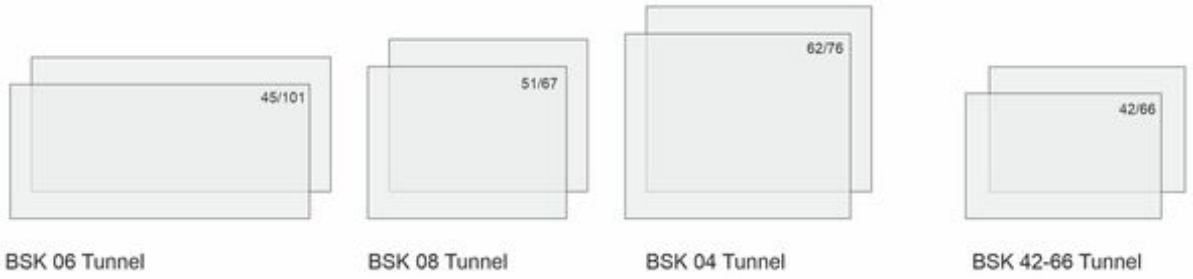

Door dimensions height x width in cm

Eck corners

from page 236

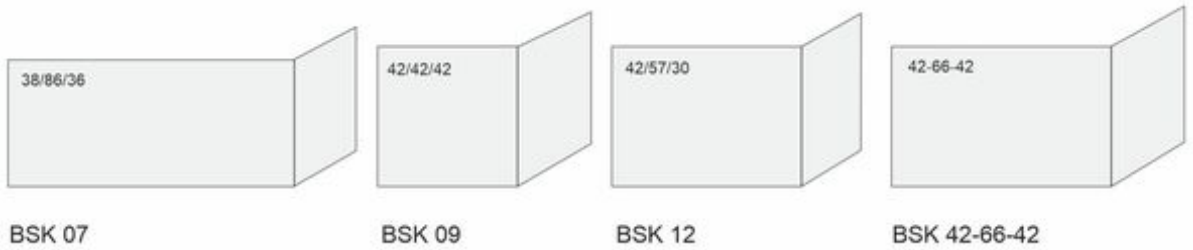

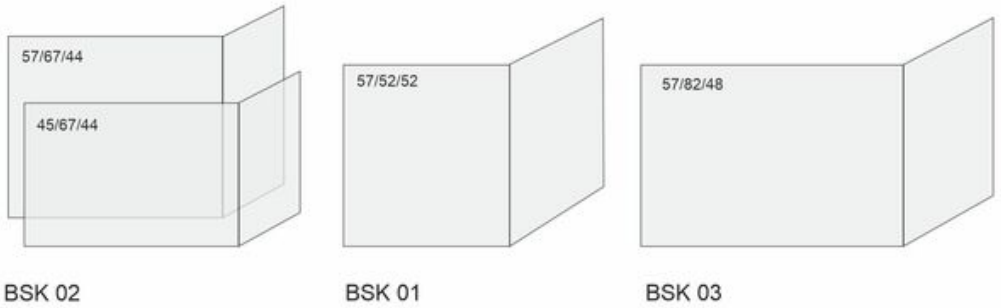

Door dimensions height x width x width in cm

Panorama formats

from page 256

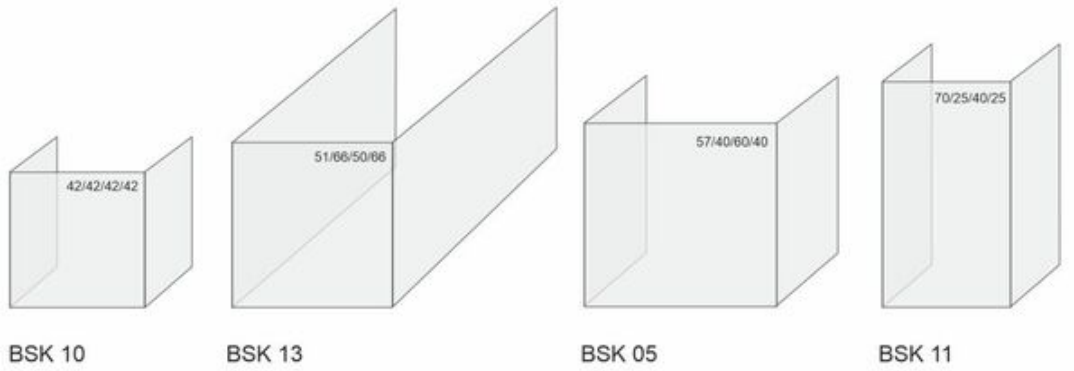

Door dimensions height x side width x front width x side width in cm

Door frame - mounting frame- System fireplaces

Door frame

Mounting frame

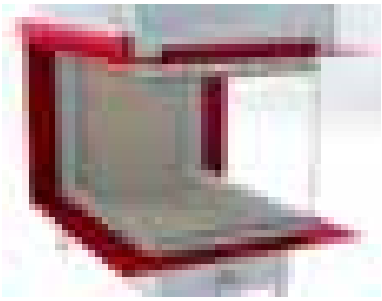
Panorama wide frame
(Fire table)

Panorama narrow frame
(Mounting bracket)

Supplementary equipment

EAS Combustion controls with potential-free relay (without additional functions) consisting of display, 1 x flush-mount box, door switch, thermocouple & bus line, each 2 m long. Preassembled EAS/EOS components, door switch, thermocouple, motor box with transmission and ø 125 mm air flap, flexible hose with adjustable clamps

EOS Combustion control with graphic touchscreen display and additional functions (differential temperature control, Moritz's flap control) consisting of: Display with control unit, 2 x flush-mount box, door switch, thermocouple, bus and connecting line, each 2 m long, 4 x water sensors with immersion sleeve and 2x extension cable 3 m. Preassembled EOS components: door switch, thermocouple, motor box with transmission and ø 125 mm air flap, flexible hose with adjustable clamps

flat	Tunnel	Eck	Panorama

BSK 42-66 side-opening door

Set consists of:	Art.-Nr.	No.	Price
BKH 5.0 Flach 42-66 DT GK FR		1	
Chamotte inner lining set (FR)		1	
SET heat exchanger rings		1	
Door frame		1	
Thermal concrete cladding BSK 42-66		1	
Anschlussstutzen exzentrisch ⌀ 200 mm		1	

Additional options			
Heat protection panel backside	HK004450		217,50
Heat protection panel backside with one side wall	HK004450-01		356,00
Heat protection panel backside with two side walls	HK004450-02		513,50
Additional ring for raised cladding *	BSK14000-113		471,50
* Differences of colour between the height extension ring and other components of BSK/BSO are due to manufacturing process and cannot be excluded. These colour differences are no reason for a claim.			
90° bend - damper flap and cleaning ⌀ 200 mm	S002208		329,00
90° bend - damper flap and cleaning ⌀ 180 mm	S002198		306,00
Anschlussstutzen exzentrisch ⌀ 180 mm	S003024		196,00
EAS (see page 189)			2199,00
Reduced price for EAS without display			-214,50
Glass ceramic coated (GKB)			145,00
Combustion chamber inner lining cast iron (FR/ Guss)			710,50
Catalyst module BKH 5.0	HK000210		1263,00
Supply air connection box ⌀ 125 mm included at EAS version	HK000135		145,00

Available variants:

Front variants				
Door frame, black		SET213323		**7200,50**

Energy efficiency index A +

BSK 08 Stil-Kamin side-opening door 51/67, with top-mount boiler

Auslaufartikel

Wasser

Set consists of:	Art.-Nr.	No.	Price
Stil-Kamin 51/67, side-opening door, single glazing, outlet ⌀ 200 mm		1	
Chamotte lining set Stil 51/67		1	
Top-mount boiler Stil 51/67		1	
Door frame		1	
Thermal concrete cladding BSK 08		1	

Additional options			
Set heat-protective panel	BSK8000-138		151,00
Additional ring for raised cladding BSK 08 *	BSK8000-006		479,00
* Differences of colour between the height extension ring and other components of BSK/BSO are due to manufacturing process and cannot be excluded. These colour differences are no reason for a claim.			
Damper flap ⌀ 200 mm with stainless steel handle	02460+10275		424,00
Conversion kit right hinge door	02380		193,00
Double glazing			419,00
Smoke pipe adapter for horizontal outlet (Attachment ring required)	BSK7000-129		588,00
EOS (see page 189)			4102,00
EAS (see page 189)			2264,00
Reduced price for EAS without display			-214,50
Air flap adapter ⌀ 125 mm for direct assembly motor at device	N003156		35,00
Socket blend stainless steel	BSK8000-126		278,50

Available variants:

Front variants				
Door frame, black		SET210580		**10878,00**

at lateral outlet an additional ring (BSK8000-006) and the smoke pipe adapter (BSK7000-129) are required

Energy efficiency index A +

BSK 08 Stil-Kamin lifting door 51/67, with top-mount boiler

Auslaufartikel

Wasser

Set consists of:	Art.-Nr.	No.	Price
Stil-Kamin 51/67, lifting door, single glazing, outlet ⌀ 200 mm		1	
Chamotte lining set Stil 51/67		1	
Top-mount boiler Stil 51/67		1	
Mounting frame		1	
Thermal concrete cladding BSK 08		1	

Additional options			
Set heat-protective panel	BSK8000-138		151,00
Additional ring for raised cladding BSK 08 *	BSK8000-006		479,00
* Differences of colour between the height extension ring and other components of BSK/BSO are due to manufacturing process and cannot be excluded. These colour differences are no reason for a claim.			
Damper flap ⌀ 200 mm with stainless steel handle	02460+10275		424,00
Double glazing			419,00
Counterweights for non-self closing door	49097		67,50
Smoke pipe adapter for horizontal outlet (Attachment ring required)	BSK7000-129		588,00
EOS (see page 189)			4102,00
EAS (see page 189)			2264,00
Reduced price for EAS without display			-214,50
Air flap adapter ⌀ 125 mm for direct assembly motor at device	N003156		35,00
Socket blend stainless steel	BSK8000-126		278,50

Available variants:

Front variants				
Mounting frame, black		SET210582		**12115,50**

at lateral outlet an additional ring (BSK8000-006) and the smoke pipe adapter (BSK7000-129) are required

Energy efficiency index A +

BSK 08 Stil-Kamin side-opening door 51/67, hot air convection top

Auslaufartikel

Set consists of:	Art.-Nr.	No.	Price
Stil-Kamin 51/67, side-opening door, single glazing, outlet ⌀ 250 mm		1	
Chamotte lining set Stil 51/67		1	
hot air convection top Stil 51/67		1	
Door frame		1	
Thermal concrete cladding BSK 08		1	

Additional options			
Protective panels for BSK 08 back wall	BSK8000-123		355,50
Heat protective panels for BSK 08 side wall	BSK8000-121		269,50
Additional ring for raised cladding BSK 08 *	BSK8000-006		479,00
* Differences of colour between the height extension ring and other components of BSK/BSO are due to manufacturing process and cannot be excluded. These colour differences are no reason for a claim.			
Damper flap ⌀ 250 mm with stainless steel handle	02461+10275		439,50
Conversion kit right hinge door	02380		193,00
Double glazing			419,00
Exchange connectiong piece⌀ 180 mm	I019448		88,50
Exchange connectiong piece⌀ 200 mm	I019449		88,50
Smoke pipe adapter for horizontal outlet	I019490		433,50
EAS (see page 189)			2264,00
Reduced price for EAS without display			-214,50
Air flap adapter ⌀ 125 mm for direct assembly motor at device	N003156		35,00
Socket blend stainless steel	BSK8000-126		278,50

Available variants:

Front variants				
Door frame, black		SET210571		**8221,50**

at rear and lateral outlet the smoke pipe adapter (I019490) is required

Energy efficiency class A

BSK 08 Stil-Kamin lifting door 51/67, hot air convection top

Auslaufartikel

Set consists of:	Art.-Nr.	No.	Price
Stil-Kamin 51/67, lifting door, single glazing, outlet ⌀ 250 mm		1	
Chamotte lining set Stil 51/67		1	
hot air convection top Stil 51/67		1	
Mounting frame		1	
Thermal concrete cladding BSK 08		1	

Additional options			
Protective panels for BSK 08 back wall	BSK8000-123		355,50
Heat protective panels for BSK 08 side wall	BSK8000-121		269,50
Additional ring for raised cladding BSK 08 *	BSK8000-006		479,00
* Differences of colour between the height extension ring and other components of BSK/BSO are due to manufacturing process and cannot be excluded. These colour differences are no reason for a claim.			
Damper flap ⌀ 250 mm with stainless steel handle	02461+10275		439,50
Double glazing			419,00
Counterweights for non-self closing door	49097		67,50
Exchange connectiong piece⌀ 180 mm	I019448		88,50
Exchange connectiong piece⌀ 200 mm	I019449		88,50
Smoke pipe adapter for horizontal outlet	I019490		433,50
EAS (see page 189)			2264,00
Reduced price for EAS without display			-214,50
Air flap adapter ⌀ 125 mm for direct assembly motor at device	N003156		35,00
Socket blend stainless steel	BSK8000-126		278,50

Available variants:

Front variants				
Mounting frame, black		SET210573		**9459,00**

at rear and lateral outlet the smoke pipe adapter (I019490) is required

Energy efficiency class A

BSK 04 Stil-Kamin flat 62-76 ST GK S04.2

Set consists of:	Art.-Nr.	No.	Price
Stil-Kamin flat 62-76 ST GK S04.2, outlet ⌀ 200 mm		1	
Chamotte lining set (brick plates) 62/76		1	
SET heat exchanger rings		1	
Mounting frame		1	
Thermal concrete cladding BSK 04		1	
Anschlussstutzen exzentrisch ⌀ 200 mm		1	

Additional options			
Heat protective panels for BSK 04 back wall	BSK4000-118		261,00
Heat protective panels for BSK 04 side wall	BSK4000-119		209,00
Additional ring for raised cladding BSK 04 *	BSK4000-009		510,50
* Differences of colour between the height extension ring and other components of BSK/BSO are due to manufacturing process and cannot be excluded. These colour differences are no reason for a claim.			
Connection piece eccentric ⌀ 180 mm	S003024		0,00
90° bend - dumper flap and cleaning ⌀ 200 mm	S002208		329,00
90° bend - dumper flap and cleaning ⌀ 180 mm	S002198		306,00
Damper flap ⌀ 200 mm with stainless steel handle	02460+10275		424,00
Glass ceramic coated (GKB)			281,50
Counterweights for non-self closing door	49097		67,50
EAS (see page 189)			2264,00
Reduced price for EAS without display			-214,50
Catalyst module BKH 5.0	HK000210		1263,00
Socket blend stainless steel	BSK4000-122		278,50

Available variants:

Front variants				
Mounting frame, black 50 mm		SET213423		**11075,00**

Energy efficiency index A +

BSK 06 AK 45/101 lifting door, hot air convection top

Auslaufartikel

Set consists of:	Art.-Nr.	No.	Price
Architektur-Kamin 45/101, lifting door, single glazing, outlet ⌀ 250 mm		1	
Chamotte lining set, bright, for AK 45/101		1	
Mounting frame		1	
Thermal concrete cladding BSK 06		1	
hot air convection top BSK 06		1	

Additional options			
Heat protective panels for BSK 06 back wall	BSK6000-135		457,00
Heat protective panels for BSK 06 side wall	BSK6000-136		209,00
Additional ring for raised cladding BSK 06 *	BSK6000-009		539,50
* Differences of colour between the height extension ring and other components of BSK/BSO are due to manufacturing process and cannot be excluded. These colour differences are no reason for a claim.			
Damper flap ⌀ 250 mm with stainless steel handle	02461+10275		439,50
Double glazing			587,50
Counterweights for non-self closing door	49097		67,50
Exchange connectiong piece⌀ 180 mm	I019448		88,50
Exchange connectiong piece⌀ 200 mm	I019449		88,50
Smoke pipe adapter for horizontal outlet	I019490		433,50
EAS (see page 189)			2264,00
Reduced price for EAS without display			-214,50
Air flap adapter ⌀ 125 mm for direct assembly motor at device	N003156		35,00

Available variants:

Front variants				
Mounting frame, black 50 mm		SET207439		**11419,50**

Energy efficiency class A

Auslaufartikel

Wasser

BSK 06 AK 45/101 lifting door, with top-mount boiler

Set consists of:	Art.-Nr.	No.	Price
Architektur-Kamin 45/101, lifting door, single glazing, outlet ⌀ 250 mm		1	
Chamotte lining set, bright, for AK 45/101		1	
Top-mount boiler AK 45/101		1	
Mounting frame		1	
Thermal concrete cladding BSK 06		1	

Additional options			
EOS (see page 189)			4102,00
EAS (see page 189)			2264,00
Reduced price for EAS without display			-214,50
Air flap adapter ⌀ 125 mm for direct assembly motor at device	N003156		35,00
Set- heat protective panel 1x rear - 1x lateral	BSK6000-140		148,50
Additional ring for raised cladding BSK 06 *	BSK6000-009		539,50
* Differences of colour between the height extension ring and other components of BSK/BSO are due to manufacturing process and cannot be excluded. These colour differences are no reason for a claim.			
Damper flap ⌀ 250 mm with stainless steel handle	02461+10275		439,50
Double glazing			587,50
Counterweights for non-self closing door	49097		67,50
Smoke pipe adapter for horizontal outlet	I019490		433,50

Available variants:

Front variants				
Mounting frame, black 50 mm		SET205293		**14703,50**

Energy efficiency index A +

BSK Tunnel 42-66, DT/DT

Set consists of:	Art.-Nr.	No.	Price
BKH 5.0 Tunnel 42-66 DT/DT GK FR		1	
Chamotte inner lining set (FR)		1	
SET heat exchanger rings		1	
Door frame		2	
Thermal concrete cladding BSK Tunnel 42-66		1	
Anschlussstutzen exzentrisch ⌀ 200 mm		1	

Additional options			
Heat protection panel for one side	HK014251		176,00
Additional ring for raised cladding *	BSK14000-113		471,50
* Differences of colour between the height extension ring and other components of BSK/BSO are due to manufacturing process and cannot be excluded. These colour differences are no reason for a claim.			
90° bend - damper flap and cleaning ⌀ 200 mm	S002208		329,00
90° bend - damper flap and cleaning ⌀ 180 mm	S002198		306,00
Anschlussstutzen exzentrisch ⌀ 180 mm	S003024		196,00
EAS (see page 189)			2199,00
Reduced price for EAS without display			-214,50
Glass ceramic coated (GKB)			290,00
Combustion chamber inner lining cast iron (FR/ Guss)			420,50
Catalyst module BKH 5.0	HK000210		1263,00
Supply air connection box ⌀ 125 mm included at EAS version	HK000135		145,00

Available variants:

Front variants				
Door frame, black		SET213324		**9168,50**

Energy efficiency index A +

BSK 08 Stil-Kamin Tunnel 51/67, ST/DT, with top-mount boiler

Auslaufartikel

Wasser

Set consists of:	Art.-Nr.	No.	Price
Stil-Kamin Tunnel 51/67, lifting door/side opening door, single glazing, outlet ⌀ 200 mm		1	
Chamotte lining set Stil 51/67		1	
Top-mount boiler Stil 51/67		1	
Door frame DT		1	
Mounting frame ST		1	
Thermal concrete cladding BSK 08		1	

Additional options			
Additional ring for raised cladding BSK 08 *	BSK8000-006		479,00
* Differences of colour between the height extension ring and other components of BSK/BSO are due to manufacturing process and cannot be excluded. These colour differences are no reason for a claim.			
Damper flap ⌀ 200 mm with stainless steel handle	02460+10275		424,00
Revision handle	02426		188,50
Double glazing (also one side only available on request)			838,00
Counterweights for non-self closing door	49097		67,50
Smoke pipe adapter for horizontal outlet (Attachment ring required)	BSK7000-129		588,00
EOS (see page 189)			4312,50
EAS (see page 189)			2474,50
Reduced price for EAS without display			-214,50
Air flap adapter ⌀ 125 mm for direct assembly motor at device	N003156		35,00
Socket blend stainless steel	BSK8000-126		278,50

Available variants:

Front variants				
Door frame or mounting frame 50 mm black		SET210586		**15780,50**

at lateral outlet an additional ring (BSK8000-006) and the smoke pipe adapter (BSK7000-129) are required

Energy efficiency index A +

BSK 08 Stil-Kamin Tunnel 51/67, ST/DT, hot air convection top

Auslaufartikel

Set consists of:	Art.-Nr.	No.	Price
Stil-Kamin Tunnel 51/67, lifting door/side opening door, single glazing, outlet ⌀ 250 mm		1	
Chamotte lining set Stil 51/67		1	
hot air convection top 51/67		1	
Door frame DT		1	
Mounting frame ST		1	
Thermal concrete cladding BSK 08		1	

Additional options			
Heat protective panels for BSK 08 side wall	BSK8000-121		269,50
Additional ring for raised cladding BSK 08 *	BSK8000-006		479,00
* Differences of colour between the height extension ring and other components of BSK/BSO are due to manufacturing process and cannot be excluded. These colour differences are no reason for a claim.			
Damper flap ⌀ 250 mm with stainless steel handle	02461+10275		439,50
Revision handle	02426		188,50
Double glazing (also one side only available on request)			838,00
Counterweights for non-self closing door	49097		67,50
Exchange connectiong piece ⌀ 180 mm	I019448		88,50
Exchange connectiong piece ⌀ 200 mm	I019449		88,50
Smoke pipe adapter for horizontal outlet	I019490		433,50
EAS (see page 189)			2474,50
Reduced price for EAS without display			-214,50
Air flap adapter ⌀ 125 mm for direct assembly motor at device	N003156		35,00
Socket blend stainless steel	BSK8000-126		278,50

Available variants:

Front variants				
Door frame or mounting frame, 50 mm black		SET210578		**13124,00**

at rear and lateral outlet the smoke pipe adapter (I019490) is required

Energy efficiency class A

BSK 04

Set consists of:	Art.-Nr.	No.	Price
Stil-Kamin Tunnel 62/76, lifting/tilting door, single glazing, outlet ⌀ 250 mm		1	
Chamotte lining set 62/76 Tunnel		1	
Mounting frame		2	
Thermal concrete cladding BSK 04		1	

Additional options			
Heat protective panels for BSK 04 side wall	BSK4000-119		209,00
Additional ring for raised cladding BSK 04 *	BSK4000-009		510,50
* Differences of colour between the height extension ring and other components of BSK/BSO are due to manufacturing process and cannot be excluded. These colour differences are no reason for a claim.			
Damper flap ⌀ 250 mm with stainless steel handle	02461+10275		439,50
Double glazing (also one side only available on request)			1209,50
Counterweights for non-self closing door	49097		67,50
Version with 2 lifting doors upon request			
Socket blend stainless steel	BSK4000-122		278,50

Available variants:

Front variants				
Mounting frame, black 50 mm		SET207435		**14372,50**

Energy efficiency class A

BSK 06 AK 45/101 lifting/tilting door, hot air convection top

Auslaufartikel

Set consists of:	Art.-Nr.	No.	Price
AK 45/101, lifting/tilting door, single glazing, outlet ⌀ 250 mm		1	
Chamotte lining set, bright, for AK 45/101 Tunnel		1	
hot air convection top AK 45/101		1	
Mounting frame		2	
Thermal concrete cladding BSK 06		1	

Additional options			
Heat protective panels for BSK 06 side wall	BSK6000-136		209,00
Additional ring for raised cladding BSK 06 *	BSK6000-009		539,50
* Differences of colour between the height extension ring and other components of BSK/BSO are due to manufacturing process and cannot be excluded. These colour differences are no reason for a claim.			
Damper flap ⌀ 250 mm with stainless steel handle	02461+10275		439,50
Double glazing (also one side only available on request)			1174,50
Counterweights for non-self closing door	49097		67,50
Exchange connectiong piece⌀ 180 mm	I019448		88,50
Exchange connectiong piece⌀ 200 mm	I019449		88,50
Smoke pipe adapter for horizontal outlet	I019490		433,50
EAS (see page 189)			2264,00
Reduced price for EAS without display			-214,50
Air flap adapter ⌀ 125 mm for direct assembly motor at device	N003156		35,00
Lifting doors on both sides available upon request			

Available variants:

Front variants				
Mounting frame, black, 50 mm		SET207443		**14814,00**

Energy efficiency class A

BSK 06 AK 45/101 lifting/tilting door, with top-mount boiler

Auslaufartikel

Wasser

Set consists of:	Art.-Nr.	No.	Price
AK 45/101, lifting/tilting door, single glazing, outlet ⌀ 250 mm		1	
Chamotte lining set, bright, for AK 45/101 Tunnel		1	
Top-mount boiler AK 45/101		1	
Mounting frame		2	
Thermal concrete cladding BSK 06		1	

Additional options			
EOS (see page 189)			4102,00
EAS (see page 189)			2264,00
Reduced price for EAS without display			-214,50
Air flap adapter ⌀ 125 mm for direct assembly motor at device	N003156		35,00
Additional ring for raised cladding BSK 06 *	BSK6000-009		539,50
* Differences of colour between the height extension ring and other components of BSK/BSO are due to manufacturing process and cannot be excluded. These colour differences are no reason for a claim.			
Damper flap ⌀ 250 mm with stainless steel handle	02461+10275		439,50
Counterweights for non-self closing door	49097		67,50
Double glazing (also one side only available on request)			1174,50
Smoke pipe adapter for horizontal outlet	I019490		433,50
Lifting doors on both sides available upon request			

Available variants:

Front variants				
Mounting frame, black 50 mm		SET208980		**18098,00**

Energy efficiency index A +

BSK Eck 42-66-42 DTL

Set consists of:	Art.-Nr.	No.	Price
BKH 5.0 Eck 42-66-42 DTL, two-piece ceramic glass		1	
Chamotte inner lining set (FR)		1	
SET heat exchanger rings		1	
Door frame		1	
Thermal concrete cladding BSK Eck		1	
Anschlussstutzen exzentrisch ⌀ 200 mm		1	

Additional options			
Heat protection panel with one side wall	HK021450		391,50
Additional ring for raised cladding *	BSK14000-113		471,50
* Differences of colour between the height extension ring and other components of BSK/BSO are due to manufacturing process and cannot be excluded. These colour differences are no reason for a claim.			
90° bend - damper flap and cleaning ⌀ 200 mm	S002208		329,00
90° bend - damper flap and cleaning ⌀ 180 mm	S002198		306,00
Anschlussstutzen exzentrisch ⌀ 180 mm	S003024		196,00
EAS (see page 189)			2199,00
Reduced price for EAS without display			-214,50
Glass ceramic coated (GKB)			362,50
Combustion chamber inner lining cast iron (FR/ Guss)			478,50
Catalyst module BKH 5.0	HK000210		1263,00
Supply air connection box ⌀ 125 mm included at EAS version	HK000135		145,00

Available variants:

Front variants				
Door frame, black		SET213325		**8300,00**

Energy efficiency index A +

BSK Eck 42-66-42 DTR

Set consists of:	Art.-Nr.	No.	Price
BKH 5.0 Eck 42-66-42 DTR, two-piece ceramic glass		1	
Chamotte inner lining set (FR)		1	
SET heat exchanger rings		1	
Door frame		1	
Thermal concrete cladding BSK Eck		1	
Anschlussstutzen exzentrisch ⌀ 200 mm		1	

Additional options			
Heat protection panel with one side wall	HK021450		391,50
Additional ring for raised cladding *	BSK14000-113		471,50
* Differences of colour between the height extension ring and other components of BSK/BSO are due to manufacturing process and cannot be excluded. These colour differences are no reason for a claim.			
90° bend - damper flap and cleaning ⌀ 200 mm	S002208		329,00
90° bend - damper flap and cleaning ⌀ 180 mm	S002198		306,00
Anschlussstutzen exzentrisch ⌀ 180 mm	S003024		196,00
EAS (see page 189)			2199,00
Reduced price for EAS without display			-214,50
Glass ceramic coated (GKB)			362,50
Combustion chamber inner lining cast iron (FR/ Guss)			478,50
Catalyst module BKH 5.0	HK000210		1263,00
Supply air connection box ⌀ 125 mm included at EAS version	HK000135		145,00

Available variants:

Front variants				
Door frame, black		SET213326		**8300,00**

Energy efficiency index A +

Auslaufartikel

BSK 01 side-opening door

Set consists of:	Art.-Nr.	No.	Price
Eck 57/52/52, side-opening door, single glazing two-piece ceramic glass		1	
Chamotte lining set Eck 57/52/52		1	
Cast iron hot air hood ⌀ 200 mm		1	
Door frame		1	
Thermal concrete cladding BSK 01		1	

Additional options			
Heat protective panels for BSK 01 side & back walls	BSK1000-143		338,50
Damper flap ⌀ 200 mm with stainless steel handle	02460+10275		424,00
Additional ring for raised cladding BSK 01 *	BSK1000-009		344,50
* Differences of colour between the height extension ring and other components of BSK/BSO are due to manufacturing process and cannot be excluded. These colour differences are no reason for a claim.			
Conversion kit right hinge door	02380		193,00
Spare connecting piece ⌀ 250 mm	R014022-02		0,00
Spare connecting piece ⌀ 180 mm	R014022-03		0,00
EAS (see page 189)			2264,00
Reduced price for EAS without display			-214,50
Air flap adapter ⌀ 125 mm for direct assembly motor at device	N003156		35,00
Socket blend stainless steel	BSK1000-153		242,00

Available variants:

Front variants				
Door frame, black		SET213042		**8199,00**

Energy efficiency class A

Auslaufartikel

BSK 01 lifting door

Set consists of:	Art.-Nr.	No.	Price
Eck 57/52/52, lifting door, single glazing two-piece ceramic glass		1	
Chamotte lining set Eck 57/52/52		1	
Cast iron hot air hood ⌀ 200 mm		1	
Mounting frame		1	
Thermal concrete cladding BSK 01		1	

Additional options			
Heat protective panels for BSK 01 side & back walls	BSK1000-143		338,50
Counterweights for non-self closing door	49097		67,50
Damper flap ⌀ 200 mm with stainless steel handle	02460+10275		424,00
Additional ring for raised cladding BSK 01 *	BSK1000-009		344,50
* Differences of colour between the height extension ring and other components of BSK/BSO are due to manufacturing process and cannot be excluded. These colour differences are no reason for a claim.			
Spare connecting piece ⌀ 250 mm	R014022-02		0,00
Spare connecting piece ⌀ 180 mm	R014022-03		0,00
EAS (see page 189)			2264,00
Reduced price for EAS without display			-214,50
Air flap adapter ⌀ 125 mm for direct assembly motor at device	N003156		35,00
Socket blend stainless steel	BSK1000-153		242,00

Available variants:

Front variants				
Mounting frame, black 50 mm		SET213043		**9631,00**

Energy efficiency class A

BSK 02 Corner fireplace waterbearing 45/67/44 left side, lifting door

Wasser

Set consists of:	Art.-Nr.	No.	Price
Corner fireplace waterbearing 45/67/44, left side, lifting door two-piece ceramic glass, outlet ⌀ 180 mm		1	
Chamotte lining set, bright, for Eck-Kamin 45/67/44 l/r		1	
Thermal concrete cladding BSK 02		1	
ISO upper lining		1	

Additional options			
EOS (see page 189)			4102,00
EAS (see page 189)			2264,00
Reduced price for EAS without display			-214,50
Air flap adapter ⌀ 125 mm for direct assembly motor at device	N003156		35,00
Counterweights for non-self closing door	49097		67,50
Set- heat protective panel 1x rear - 1x lateral	BSK2000-208		56,00
Additional ring for raised cladding BSK 02 *	BSK2000-007		442,50
* Differences of colour between the height extension ring and other components of BSK/BSO are due to manufacturing process and cannot be excluded. These colour differences are no reason for a claim.			
Conversion kit for cleaning on top including push-in handle	BSK2000-201		304,00
Socket blend stainless steel	BSK2000-162		242,00

Available variants:

Front variants				
Mounting frame, black 50 mm		SET212994		**13744,50**

Energy efficiency index A +

BSK 02 Corner fireplace waterbearing 45/67/44 right side, lifting door

Wasser

Set consists of:	Art.-Nr.	No.	Price
Corner fireplace waterbearing 45/67/44, right side, lifting door two-piece ceramic glass, outlet ⌀ 180 mm		1	
Chamotte lining set, bright, for Eck-Kamin 45/67/44 l/r		1	
Thermal concrete cladding BSK 02		1	
ISO upper lining		1	

Additional options			
EOS (see page 189)			4102,00
EAS (see page 189)			2264,00
Reduced price for EAS without display			-214,50
Air flap adapter ⌀ 125 mm for direct assembly motor at device	N003156		35,00
Counterweights for non-self closing door	49097		67,50
Set- heat protective panel 1x rear - 1x lateral	BSK2000-208		56,00
Additional ring for raised cladding BSK 02 *	BSK2000-007		442,50
* Differences of colour between the height extension ring and other components of BSK/BSO are due to manufacturing process and cannot be excluded. These colour differences are no reason for a claim.			
Conversion kit for cleaning on top including push-in handle	BSK2000-201		304,00
Socket blend stainless steel	BSK2000-162		242,00

Available variants:

Front variants				
Mounting frame, black 50 mm		SET212996		**13744,50**

Energy efficiency index A +

Auslaufartikel

BSK 02 Eck 45/67/44 left side, lifting door

Set consists of:	Art.-Nr.	No.	Price
Eck 45/67/44, left side, lifting door, single glazing two-piece ceramic glass		1	
Chamotte lining set Eck 45/67/44 l		1	
Cast iron hot air hood ⌀ 200 mm		1	
Thermal concrete cladding BSK 02		1	

Additional options			
Heat protective panels for BSK 02 side & back walls	BSK2000-125		391,50
Damper flap ⌀ 200 mm with stainless steel handle	02460+10275		424,00
Spare connecting piece ⌀ 250 mm	R014022-02		0,00
Spare connecting piece ⌀ 180 mm	R014022-03		0,00
Counterweights for non-self closing door	49097		67,50
Additional ring for raised cladding BSK 02 *	BSK2000-007		442,50
* Differences of colour between the height extension ring and other components of BSK/BSO are due to manufacturing process and cannot be excluded. These colour differences are no reason for a claim.			
EAS (see page 189)			2264,00
Reduced price for EAS without display			-214,50
Air flap adapter ⌀ 125 mm for direct assembly motor at device	N003156		35,00
Socket blend stainless steel	BSK2000-162		242,00

Available variants:

Front variants				
Mounting frame, black 50 mm		SET213044		**10161,00**

Energy efficiency class A

BSK 02 Eck 45/67/44 right side, lifting door

Auslaufartikel

Set consists of:	Art.-Nr.	No.	Price
Eck 45/67/44, right side, lifting door, single glazing two-piece ceramic glass		1	
Chamotte lining set Eck 45/67/44 r		1	
Cast iron hot air hood ⌀ 200 mm		1	
Thermal concrete cladding BSK 02		1	

Additional options			
Heat protective panels for BSK 02 side & back walls	BSK2000-125		391,50
Damper flap ⌀ 200 mm with stainless steel handle	02460+10275		424,00
Counterweights for non-self closing door	49097		67,50
Spare connecting piece ⌀ 250 mm	R014022-02		0,00
Spare connecting piece ⌀ 180 mm	R014022-03		0,00
Additional ring for raised cladding BSK 02 *	BSK2000-007		442,50
* Differences of colour between the height extension ring and other components of BSK/BSO are due to manufacturing process and cannot be excluded. These colour differences are no reason for a claim.			
EAS (see page 189)			2264,00
Reduced price for EAS without display			-214,50
Air flap adapter ⌀ 125 mm for direct assembly motor at device	N003156		35,00
Socket blend stainless steel	BSK2000-162		242,00

Available variants:

Front variants				
Mounting frame, black 50 mm		SET213045		**10161,00**

Energy efficiency class A

Auslaufartikel

BSK 02 Eck 57/67/44 left side, lifting door

Set consists of:	Art.-Nr.	No.	Price
Eck 57/67/44, left side, lifting door, single glazing two-piece ceramic glass		1	
Chamotte lining set Eck 57/67/44 l		1	
Cast iron hot air hood ⌀ 200 mm		1	
Thermal concrete cladding BSK 02		1	

Additional options			
Heat protective panels for BSK 02 side & back walls	BSK2000-125		391,50
Damper flap ⌀ 200 mm with stainless steel handle	02460+10275		424,00
Counterweights for non-self closing door	49097		67,50
Spare connecting piece ⌀ 250 mm	R014022-02		0,00
Spare connecting piece ⌀ 180 mm	R014022-03		0,00
Additional ring for raised cladding BSK 02 *	BSK2000-007		442,50
* Differences of colour between the height extension ring and other components of BSK/BSO are due to manufacturing process and cannot be excluded. These colour differences are no reason for a claim.			
EAS (see page 189)			2264,00
Reduced price for EAS without display			-214,50
Air flap adapter ⌀ 125 mm for direct assembly motor at device	N003156		35,00
Socket blend stainless steel	BSK2000-162		242,00

Available variants:

Front variants				
Mounting frame, black 50 mm		SET213046		**10372,50**

Energy efficiency class A

BSK 02 Eck 57/67/44 right side, lifting door

Auslaufartikel

Set consists of:	Art.-Nr.	No.	Price
Eck 57/67/44, right side, lifting door, single glazing two-piece ceramic glass		1	
Chamotte lining set Eck 57/67/44 r		1	
Cast iron hot air hood ⌀ 200 mm		1	
Thermal concrete cladding BSK 02		1	

Additional options			
Heat protective panels for BSK 02 side & back walls	BSK2000-125		391,50
Damper flap ⌀ 200 mm with stainless steel handle	02460+10275		424,00
Counterweights for non-self closing door	49097		67,50
Spare connecting piece ⌀ 250 mm	R014022-02		0,00
Spare connecting piece ⌀ 180 mm	R014022-03		0,00
Additional ring for raised cladding BSK 02 *	BSK2000-007		442,50
* Differences of colour between the height extension ring and other components of BSK/BSO are due to manufacturing process and cannot be excluded. These colour differences are no reason for a claim.			
EAS (see page 189)			2264,00
Reduced price for EAS without display			-214,50
Air flap adapter ⌀ 125 mm for direct assembly motor at device	N003156		35,00
Socket blend stainless steel	BSK2000-162		242,00

Available variants:

Front variants				
Mounting frame, black 50 mm		SET213047		**10372,50**

Energy efficiency class A

Auslaufartikel

BSK 03 Eck right side, lifting door

Set consists of:	Art.-Nr.	No.	Price
Eck 57/82/48, right side, lifting door, single glazing two-piece ceramic glass		1	
Chamotte lining set Eck 57/82/48 r		1	
Cast iron hot air hood ⌀ 200 mm		1	
Thermal concrete cladding BSK 03		1	

Additional options			
Heat protective panels for BSK 02 side & back walls	BSK3000-129		469,00
Damper flap ⌀ 200 mm with stainless steel handle	02460+10275		424,00
Counterweights for non-self closing door	49097		67,50
Spare connecting piece ⌀ 250 mm	R014022-02		0,00
Spare connecting piece ⌀ 180 mm	R014022-03		0,00
Additional ring for raised cladding BSK 03 *	BSK3000-007		452,50
* Differences of colour between the height extension ring and other components of BSK/BSO are due to manufacturing process and cannot be excluded. These colour differences are no reason for a claim.			
EAS (see page 189)			2264,00
Reduced price for EAS without display			-214,50
Air flap adapter ⌀ 125 mm for direct assembly motor at device	N003156		35,00
Socket blend stainless steel	BSK3000-142		278,50

Available variants:

Front variants				
Mounting frame, black 50 mm		SET213049		**11579,50**

Energy efficiency class A

Auslaufartikel

BSK 07 low left side

Set consists of:	Art.-Nr.	No.	Price
Eck 38/86/36, left side, lifting door, single glazing two-piece ceramic glass, outlet ⌀ 200 mm		1	
Chamotte lining set Eck 38/86/36		1	
Thermal concrete cladding BSK 07		1	

Additional options			
Heat protective panels for BSK 07 side & back walls	BSK7000-131		417,50
Damper flap ⌀ 200 mm with stainless steel handle	02460+10275		424,00
Smoke pipe adapter for horizontal/vertical outlet Spare connecting piece not possible	BSK7000-129		588,00
Counterweights for non-self closing door	49097		67,50
Additional ring for raised cladding BSK 07 *	BSK7000-007		510,50
* Differences of colour between the height extension ring and other components of BSK/BSO are due to manufacturing process and cannot be excluded. These colour differences are no reason for a claim.			
EAS (see page 189)			2264,00
Reduced price for EAS without display			-214,50
Air flap adapter ⌀ 125 mm for direct assembly motor at device	N003156		35,00
Socket blend stainless steel	BSK7000-137		242,00

Available variants:

Front variants				
Mounting frame, black 50 mm		SET211196		**10701,00**

Auslaufartikel

BSK 07 low right side

Set consists of:	Art.-Nr.	No.	Price
Eck 38/86/36, right side, lifting door, single glazing two-piece ceramic glass, outlet ⌀ 200 mm		1	
Chamotte lining set Eck 38/86/36		1	
Thermal concrete cladding BSK 07		1	

Additional options			
Heat protective panels for BSK 07 side & back walls	BSK7000-131		417,50
Damper flap ⌀ 200 mm with stainless steel handle	02460+10275		424,00
Smoke pipe adapter for horizontal/vertical outlet Spare connecting piece not possible	BSK7000-129		588,00
Counterweights for non-self closing door	49097		67,50
Additional ring for raised cladding BSK 07 *	BSK7000-007		510,50
* Differences of colour between the height extension ring and other components of BSK/BSO are due to manufacturing process and cannot be excluded. These colour differences are no reason for a claim.			
EAS (see page 189)			2264,00
Reduced price for EAS without display			-214,50
Air flap adapter ⌀ 125 mm for direct assembly motor at device	N003156		35,00
Socket blend stainless steel	BSK7000-137		242,00

Available variants:

Front variants				
Mounting frame, black 50 mm		SET211198		**10701,00**

Energy efficiency class A

Auslaufartikel

BSK 07 high left side

Set consists of:	Art.-Nr.	No.	Price
Eck 38/86/36, left side, lifting door, single glazing two-piece ceramic glass, outlet ⌀ 200 mm		1	
Chamotte lining set Eck 38/86/36		1	
Support bearing BSK 07		1	
Thermal concrete cladding BSK 07		1	

Additional options			
Heat protective panels for BSK 07 side & back walls	BSK7000-131		417,50
Damper flap ⌀ 200 mm with stainless steel handle	02460+10275		424,00
Smoke pipe adapter for horizontal/vertical outlet Spare connecting piece not possible	BSK7000-129		588,00
Counterweights for non-self closing door	49097		67,50
Additional ring for raised cladding BSK 07 *	BSK7000-007		510,50
* Differences of colour between the height extension ring and other components of BSK/BSO are due to manufacturing process and cannot be excluded. These colour differences are no reason for a claim.			
EAS (see page 189)			2264,00
Reduced price for EAS without display			-214,50
Socket blend stainless steel	BSK7000-137		242,00

Available variants:

Front variants				
Mounting frame, black 50 mm		SET211200		**11358,50**

Energy efficiency class A

Auslaufartikel

BSK 07 high right side

Set consists of:	Art.-Nr.	No.	Price
Eck 38/86/36, right side, lifting door, single glazing two-piece ceramic glass, outlet ⌀ 200 mm		1	
Chamotte lining set Eck 38/86/36		1	
Support bearing BSK 07		1	
Thermal concrete cladding BSK 07		1	

Additional options			
Heat protective panels for BSK 07 side & back walls	BSK7000-131		417,50
Damper flap ⌀ 200 mm with stainless steel handle	02460+10275		424,00
Smoke pipe adapter for horizontal/vertical outlet Spare connecting piece not possible	BSK7000-129		588,00
Counterweights for non-self closing door	49097		67,50
Additional ring for raised cladding BSK 07 *	BSK7000-007		510,50
* Differences of colour between the height extension ring and other components of BSK/BSO are due to manufacturing process and cannot be excluded. These colour differences are no reason for a claim.			
EAS (see page 189)			2264,00
Reduced price for EAS without display			-214,50
Socket blend stainless steel	BSK7000-137		242,00

Available variants:

Front variants				
Mounting frame, black 50 mm		SET211202		**11358,50**

Energy efficiency class A

BSK 12 Corner fireplace waterbearing 42/57/30 left side, side-opening door

Set consists of:	Art.-Nr.	No.	Price
Corner fireplace waterbearing 42/57/30, left side, side-opening door two-piece ceramic glass, outlet ⌀ 180 mm		1	
Chamotte lining set, bright, for Eck-Kamin 42/57/30		1	
Mounting frame		1	
Thermal concrete cladding BSK 12		1	

Additional options			
EOS (see page 189)			4102,00
EAS (see page 189)			2264,00
Reduced price for EAS without display			-214,50
Air flap adapter ⌀ 125 mm for direct assembly motor at device	N003156		35,00
Set heat-protective panel	BSK12000-124		63,00
Additional ring for raised cladding BSK 12 *	BSK12000-007		430,50
* Differences of colour between the height extension ring and other components of BSK/BSO are due to manufacturing process and cannot be excluded. These colour differences are no reason for a claim.			
Socket blend stainless steel	BSK12000-017		242,00

Wasser

Available variants:

Front variants				
Mounting frame, black 50 mm		SET213020		**10682,00**

Energy efficiency index A +

BSK 12 Corner fireplace waterbearing 42/57/30 right side, side-opening door

Set consists of:	Art.-Nr.	No.	Price
Corner fireplace waterbearing 42/57/30, right side, side-opening door two-piece ceramic glass, outlet ⌀ 180 mm		1	
Chamotte lining set, bright, for Eck-Kamin 42/57/30		1	
Mounting frame		1	
Thermal concrete cladding BSK 12		1	

Additional options			
EOS (see page 189)			4102,00
EAS (see page 189)			2264,00
Reduced price for EAS without display			-214,50
Air flap adapter ⌀ 125 mm for direct assembly motor at device	N003156		35,00
Set heat-protective panel	BSK12000-124		63,00
Additional ring for raised cladding BSK 12 *	BSK12000-007		430,50
* Differences of colour between the height extension ring and other components of BSK/BSO are due to manufacturing process and cannot be excluded. These colour differences are no reason for a claim.			
Socket blend stainless steel	BSK12000-017		242,00

Wasser

Available variants:

Front variants				
Mounting frame, black 50 mm		SET213021		**10682,00**

BSK 12 Eck 42/57/30 left side, side-opening door

Auslaufartikel

Set consists of:	Art.-Nr.	No.	Price
Eck 42/57/30, left side, side-opening door, single glazing two-piece ceramic glass, outlet ⌀ 200 mm		1	
Chamotte lining set Eck 42/57/30 l		1	
Mounting frame		1	
Thermal concrete cladding BSK 12		1	

Additional options			
Heat protective panels for BSK 12 side & back walls	BSK12000-120		307,50
Damper flap ⌀ 200 mm with stainless steel handle	02460+10275		424,00
Additional ring for raised cladding BSK 12 *	BSK12000-007		430,50
* Differences of colour between the height extension ring and other components of BSK/BSO are due to manufacturing process and cannot be excluded. These colour differences are no reason for a claim.			
EAS (see page 189)			2264,00
Reduced price for EAS without display			-214,50
Air flap adapter ⌀ 125 mm for direct assembly motor at device	N003156		35,00
Socket blend stainless steel	BSK12000-017		242,00

Available variants:

Front variants				
Mounting frame, black 50 mm		SET213022		**8351,50**

Energy efficiency index A +

BSK 12 Eck 42/57/30 right side, side-opening door

Auslaufartikel

Set consists of:	Art.-Nr.	No.	Price
Eck 42/57/30, right side, side-opening door, single glazing two-piece ceramic glass, outlet ⌀ 200 mm		1	
Chamotte lining set Eck 42/57/30 r		1	
Mounting frame		1	
Thermal concrete cladding BSK 12		1	

Additional options			
Heat protective panels for BSK 12 side & back walls	BSK12000-120		307,50
Damper flap ⌀ 200 mm with stainless steel handle	02460+10275		424,00
Additional ring for raised cladding BSK 12 *	BSK12000-007		430,50
* Differences of colour between the height extension ring and other components of BSK/BSO are due to manufacturing process and cannot be excluded. These colour differences are no reason for a claim.			
EAS (see page 189)			2264,00
Reduced price for EAS without display			-214,50
Air flap adapter ⌀ 125 mm for direct assembly motor at device	N003156		35,00
Socket blend stainless steel	BSK12000-017		242,00

Available variants:

Front variants				
Mounting frame, black 50 mm		SET213023		**8351,50**

BSK 10

Set consists of:	Art.-Nr.	No.	Price
Panorama 42/42/42/42, outlet ⌀ 200 mm		1	
Chamotte lining set Panorama 42/42/42/42		1	
Thermal concrete cladding BSK 10		1	

Additional options			
Heat protective panels for BSK 10 back wall	BSK10000-124		209,00
Damper flap ⌀ 200 mm with stainless steel handle	02460+10275		424,00
Additional ring for raised cladding BSK 10 *	BSK10000-012		337,00
* Differences of colour between the height extension ring and other components of BSK/BSO are due to manufacturing process and cannot be excluded. These colour differences are no reason for a claim.			
Counterweights for non-self closing door	49097		67,50
Exchange connectiong piece ⌀ 180 mm	I058043		111,50
Socket blend stainless steel	BSK10000-128		242,00

Available variants:

Front variants				
Fire table, black		SET211404		**11558,50**

Energy efficiency class A

BSK 11

Set consists of:	Art.-Nr.	No.	Price
Panorama 70/25/40/25		1	
outlet ⌀ 200 mm			
Chamotte lining set Panorama 70/25/40/25		1	
Thermal concrete cladding BSK 11		1	

Additional options			
Heat protective panels for BSK 11 back wall	BSK11000-124		221,00
Damper flap ⌀ 200 mm with stainless steel handle	02460+10275		424,00
Additional ring for raised cladding BSK 11 *	BSK11000-012		391,50
* Differences of colour between the height extension ring and other components of BSK/BSO are due to manufacturing process and cannot be excluded. These colour differences are no reason for a claim.			
Counterweights for non-self closing door	49097		67,50
Exchange connectiong piece⌀ 180 mm	I058043		111,50
Socket blend stainless steel	BSK11000-129		242,00

Available variants:

Front variants				
Fire table, black		SET211406		**12376,00**

Energy efficiency index A +

BSK 5.1

Set consists of:	Art.-Nr.	No.	Price
Panorama 57/40/60/40 , outlet ⌀ 200 mm		1	
Chamotte lining set Panorama 57/40/60/40		1	
Thermal concrete cladding BSK 5.1		1	

Additional options			
Heat protective panels for BSK 5.1 back wall	BSK5000-139		144,50
Smoke pipe adapter for horizontal/vertical outlet inclusive spare connecting piece	I009168		622,00
Damper flap ⌀ 200 mm with stainless steel handle	02460+10275		424,00
Connection adapter ⌀ 160 mm for changing the combustion air supply from side to rear	BSK5000-130		168,00
Additional ring for raised cladding BSK 5.1 *	BSK5000-014		452,50
* Differences of colour between the height extension ring and other components of BSK/BSO are due to manufacturing process and cannot be excluded. These colour differences are no reason for a claim.			
Counterweights for non-self closing door	49097		67,50
Exchange connectiong piece⌀ 180 mm	I019448		88,50
Exchange connectiong piece⌀ 250 mm	I019450		88,50
Socket blend stainless steel	BSK5000-133		242,00

Available variants:

Front variants				
Fire table,black		SET213069		**12409,00**

Energy efficiency class A

BSK 13

Set consists of:	Art.-Nr.	No.	Price
Panorama 51/66/50/66, with support bracket and heat protective panel outlet ⌀ 200 mm		1	
Combustion chamber lining Panorama 51/66/50/66		1	
Thermal concrete cladding BSK 13		1	

Additional options			
Damper flap ⌀ 200 mm with stainless steel handle	02460+10275		424,00
Additional ring for raised cladding BSK 13 *	BSK13000-006		453,00
* Differences of colour between the height extension ring and other components of BSK/BSO are due to manufacturing process and cannot be excluded. These colour differences are no reason for a claim.			
Counterweights for non-self closing door			included/modification
Exchange connectiong piece ⌀ 180 mm	I019448		88,50
Exchange connectiong piece ⌀ 250 mm	I019450		88,50
Socket blend stainless steel	BSK13000-120		99,50

Available variants:

Front variants				
Fire table black		SET213096		**14432,50**

Energy efficiency index A +

Glazing formats

Flat glazing

from page 260

BSG 01

Door dimensions height x width in cm

Eck corners

from page 264

BSG 02

Door dimensions height x width x width in cm

Door frame- Masonry stove kit systems

Door frame

Supplementary equipment

EAS Combustion controls with potential-free relay (without additional functions) consisting of display, 1 x flush-mount box, door switch, thermocouple & bus line, each 2 m long. Preassembled EAS/EOS components, door switch, thermocouple, motor box with transmission and ø 125 mm air flap, flexible hose with adjustable clamps

EOS Combustion control with graphic touchscreen display and additional functions (differential temperature control, Moritz's flap control) consisting of: Display with control unit, 2 x flush-mount box, door switch, thermocouple, bus and connecting line, each 2 m long, 4 x water sensors with immersion sleeve and 2x extension cable 3 m. Preassembled EOS components: door switch, thermocouple, motor box with transmission and ø 125 mm air flap, flexible hose with adjustable clamps

BSG 01 low with MSS heat storage set standing next

Set consists of:	Art.-Nr.	No.	Price
GOT 51/67-ZLside-opening door, single glazing		1	
Door frame		1	
GOF 66x42		1	
MSS elbow 90°		2	
MSS heat storage module 20 cm		2	
MSS heat storage module 10 cm		2	
MSS elbow 90° with opening top		1	
MSS heat storage module 20 cm with opening		1	
MSS bypass 40		1	
MSS elbow 90° with cleanout top		2	
MSS elbow 90° with lining, double-layered		1	
MSS base plate 75		3	
MSSI insulating block 30x30 cm		3	
MSS steel tape ring		10	
MSS glue Thermofix 1000 1 kg		2	
MSS connecting block		1	
Thermal concrete cladding BSG 01 (MSS heat storage set standing next)		1	
Inlet adapter		1	
Outlet adapter		1	
Mounting kit (with two clamps and endless tape)		2	
MSS handle with rotating part		1	

Additional options			
Double glazing			419,00
Conversion kit right hinge door	02380		193,00

Available variants:

Front variants:				
Door frame, black		SET211476		**14035,50**

Energy efficiency index A +

BSG 01 low with MSS heat storage set standing next + EAS

Set consists of:	Art.-Nr.	No.	Price
GOT 51/67-ZLside-opening door, single glazing		1	
Door frame		1	
GOF 66x42		1	
MSS elbow 90°		2	
MSS heat storage module 20 cm		2	
MSS heat storage module 10 cm		2	
MSS elbow 90° with opening top		1	
MSS heat storage module 20 cm with opening		1	
MSS bypass 40		1	
MSS elbow 90° with cleanout top		2	
MSS elbow 90° with lining, double-layered		1	
MSS base plate 75		3	
MSSI insulating block 30x30 cm		3	
MSS steel tape ring		10	
MSS glue Thermofix 1000 1 kg		2	
MSS connecting block		1	
Thermal concrete cladding BSG 01 (MSS heat storage set standing next)		1	
Inlet adapter		1	
Outlet adapter		1	
Mounting kit (with two clamps and endless tape)		2	
EAS (see page 189)		1	
Mounting box		1	
Door switch wiring 3 lm		1	
Thermocouple wiring 3 lm		1	
Bus wiring 3 lm		1	
MSS handle with rotating part		1	

Additional options			
Reduced price for EAS without display			-214,50
Double glazing			419,00
Conversion kit right hinge door	02380		193,00

Available variants:

Front variants:				
Door frame, black		SET211478		**16336,50**

Energy efficiency index A +

BSG 01 high with MSS heat storage set standing on top

Set consists of:	Art.-Nr.	No.	Price
GOT 51/67-ZLside-opening door, single glazing		1	
Door frame		1	
GOF 66x42		1	
MSS elbow 90° with lining, double-layered		1	
MSS elbow 90°		4	
MSS outlet block ø 180 with sealing		1	
MSS heat storage module 10 cm with damper flap		1	
MSS elbow 90° with cleanout top		1	
MSS elbow 90° with cleanout left		1	
MSS heat storage module 20 cm		2	
MSS steel tape ring		11	
MSS glue Thermofix 1000 1 kg		2	
MSS connecting block		1	
Thermal concrete cladding BSG 01 (high)		1	
MSS handle with rotating part		1	

Additional options			
Double glazing			419,00
Conversion kit right hinge door	02380		193,00

Available variants:

Front variants:				
Door frame, black		SET211480		**12383,50**

Energy efficiency index A +

BSG 01 high with MSS heat storage set standing on top + EAS

Set consists of:	Art.-Nr.	No.	Price
GOT 51/67-ZLside-opening door, single glazing		1	
Door frame		1	
GOF 66x42		1	
MSS elbow 90° with lining, double-layered		1	
MSS elbow 90°		4	
MSS outlet block ⌀180		1	
MSS heat storage module 10 cm		1	
MSS elbow 90° with cleanout top		1	
MSS elbow 90° with cleanout left		1	
MSS heat storage module 20 cm		2	
MSS steel tape ring		11	
MSS glue Thermofix 1000 1 kg		2	
MSS connecting block		1	
Thermal concrete cladding BSG 01 (high)		1	
EAS (see page 189)		1	
Mounting box		1	
Door switch wiring 3 lm		1	
Thermocouple wiring 3 lm		1	
Bus wiring 3 lm		1	
MSS handle with rotating part		1	

Additional options			
Reduced price for EAS without display			-214,50
Double glazing			419,00
Conversion kit right hinge door	02380		193,00

Available variants:

Front variants:				
Door frame, black		SET211482		**14685,00**

Energy efficiency index A +

BSG 02 low left side with MSS heat storage set standing next

Set consists of:	Art.-Nr.	No.	Price
GOT 45/67/44-ZL L, single glazing two-piece ceramic glass		1	
Door frame		1	
GOF 50x35		1	
MSS elbow 90°		2	
MSS heat storage module 20 cm		2	
MSS heat storage module 10 cm		2	
MSS elbow 90° with opening top		1	
MSS heat storage module 20 cm with opening		1	
MSS bypass 40		1	
MSS elbow 90° with cleanout top		2	
MSS elbow 90° with lining, double-layered		1	
MSS base plate 75		3	
MSSI insulating block 30x30 cm		3	
MSS steel tape ring		10	
MSS glue Thermofix 1000 1 kg		2	
MSS connecting block		1	
Thermal concrete cladding BSG 02 (MSS heat storage set standing next)		1	
Inlet adapter		1	
Outlet adapter		1	
Mounting kit (with two clamps and endless tape)		2	
MSS handle with rotating part		1	

Additional options			
MSS connecting block backwall instead MSS connecting block / GOF short side (G023205) the MSS connecting block backwall (G015107) will be delivered	G015107		0,00

Available variants:

Front variants:				
Door frame, black		SET211488		**15631,50**

Energy efficiency index A +

BSG 02 low left side with MSS heat storage set standing next + EAS

Set consists of:	Art.-Nr.	No.	Price
GOT 45/67/44-ZL L, single glazing two-piece ceramic glass		1	
Door frame		1	
GOF 50x35		1	
MSS elbow 90°		2	
MSS heat storage module 20 cm		2	
MSS heat storage module 10 cm		2	
MSS elbow 90° with opening top		1	
MSS heat storage module 20 cm with opening		1	
MSS bypass 40		1	
MSS elbow 90° with cleanout top		2	
MSS elbow 90° with lining, double-layered		1	
MSS base plate 75		3	
MSSI insulating block 30x30 cm		3	
MSS steel tape ring		10	
MSS glue Thermofix 1000 1 kg		2	
MSS connecting block		1	
Thermal concrete cladding BSG 02 (MSS heat storage set standing next)		1	
Inlet adapter		1	
Outlet adapter		1	
Mounting kit (with two clamps and endless tape)		2	
EAS (see page 189)		1	
Mounting box		1	
Door switch wiring 3 lm		1	
Thermocouple wiring 3 lm		1	
Bus wiring 3 lm		1	
MSS handle with rotating part		1	

Additional options			
MSS connecting block backwall instead MSS connecting block / GOF short side (G023205) the MSS connecting block backwall (G015107) will be delivered	G015107		0,00
Reduced price for EAS without display			-214,50

Available variants:

Front variants:				
Door frame, black		SET211490		**17933,00**

Energy efficiency index A +

BSG 02 low right side with MSS heat storage set standing next

Set consists of:	Art.-Nr.	No.	Price
GOT 45/67/44-ZL R , single glazing two-piece ceramic glass		1	
Door frame		1	
GOF 50x35		1	
MSS elbow 90°		2	
MSS heat storage module 20 cm		2	
MSS heat storage module 10 cm		2	
MSS elbow 90° with opening top		1	
MSS heat storage module 20 cm with opening		1	
MSS bypass 40		1	
MSS elbow 90° with cleanout top		2	
MSS elbow 90° with lining, double-layered		1	
MSS base plate 75		3	
MSSI insulating block 30x30 cm		3	
MSS steel tape ring		10	
MSS glue Thermofix 1000 1 kg		2	
MSS connecting block		1	
Thermal concrete cladding BSG 02 (MSS heat storage set standing next)		1	
Inlet adapter		1	
Outlet adapter		1	
Mounting kit (with two clamps and endless tape)		2	
MSS handle with rotating part		1	

Additional options			
MSS connecting block backwall instead MSS connecting block / GOF short side (G023204) the MSS connecting block backwall (G015107) will be delivered	G015107		0,00

Available variants:

Front variants:				
Door frame, black		SET211484		**15631,50**

Energy efficiency index A +

BSG 02 low right side with MSS heat storage set standing next + EAS

Set consists of:	Art.-Nr.	No.	Price
GOT 45/67/44-ZL R, single glazing two-piece ceramic glass		1	
Door frame		1	
GOF 50x35		1	
MSS elbow 90°		2	
MSS heat storage module 20 cm		2	
MSS heat storage module 10 cm		2	
MSS elbow 90° with opening top		1	
MSS heat storage module 20 cm with opening		1	
MSS bypass 40		1	
MSS elbow 90° with cleanout top		2	
MSS elbow 90° with lining, double-layered		1	
MSS base plate 75		3	
MSSI insulating block 30x30 cm		3	
MSS steel tape ring		10	
MSS glue Thermofix 1000 1 kg		2	
MSS connecting block		1	
Thermal concrete cladding BSG 02 (MSS heat storage set standing next)		1	
Inlet adapter		1	
Outlet adapter		1	
Mounting kit (with two clamps and endless tape)		2	
EAS (see page 189)		1	
Mounting box		1	
Door switch wiring 3 lm		1	
Thermocouple wiring 3 lm		1	
Bus wiring 3 lm		1	
MSS handle with rotating part		1	

Additional options			
MSS connecting block backwall instead MSS connecting block / GOF short side (G023204) the MSS connecting block backwall (G015107) will be delivered	G015107		0,00
Reduced price for EAS without display			-214,50

Available variants:

Front variants:				
Door frame, black		SET211486		**17933,00**

Energy efficiency index A +

BSG 02 high left side with MSS heat storage set standing on top

Set consists of:	Art.-Nr.	No.	Price
GOT 45/67/44-ZL L , single glazing two-piece ceramic glass		1	
Door frame		1	
GOF 50x35		1	
MSS elbow 90° with lining, double-layered		1	
MSS elbow 90°		3	
MSS outlet block ⌀180		1	
MSS elbow 90°		2	
MSS heat storage module 10 cm		1	
MSS steel tape ring		10	
MSS heat storage module with lining 20 cm, double-layered		1	
MSS base plate 100		4	
MSS elbow 90°		1	
MSSI insulating block 20x30 cm		2	
MSSI insulating block 30x30 cm		1	
MSS glue Thermofix 1000 1 kg		2	
Thermal concrete cladding BSG 02 (high)		1	
MSS handle with rotating part		1	

Available variants:

Front variants:				
Door frame, black		SET211496		**14118,50**

Energy efficiency index A +

BSG 02 high left side with MSS heat storage set standing on top + EAS

Set consists of:	Art.-Nr.	No.	Price
GOT 45/67/44-ZL L, single glazing two-piece ceramic glass		1	
Door frame		1	
GOF 50x35		1	
MSS elbow 90° with lining, double-layered		1	
MSS elbow 90°		3	
MSS outlet block ⌀180		1	
MSS elbow 90°		2	
MSS heat storage module 10 cm		1	
MSS steel tape ring		10	
MSS heat storage module with lining 20 cm, double-layered		1	
MSS base plate 100		4	
MSS elbow 90°		1	
MSSI insulating block 20x30 cm		2	
MSSI insulating block 30x30 cm		1	
MSS glue Thermofix 1000 1 kg		2	
Thermal concrete cladding BSG 02 (high)		1	
EAS (see page 189)		1	
Mounting box		1	
Door switch wiring 3 lm		1	
Thermocouple wiring 3 lm		1	
Bus wiring 3 lm		1	
MSS handle with rotating part		1	

Additional options			
Reduced price for EAS without display			-214,50

Available variants:

Front variants:				
Door frame, black		SET211498		**16420,00**

Energy efficiency index A +

BSG 02 high right side with MSS heat storage set standing on top

Set consists of:	Art.-Nr.	No.	Price
GOT 45/67/44-ZL R, single glazing two-piece ceramic glass		1	
Door frame		1	
GOF 50x35		1	
MSS elbow 90° with lining, double-layered		1	
MSS elbow 90°		3	
MSS outlet block ⌀180		1	
MSS elbow 90°		2	
MSS heat storage module 10 cm		1	
MSS steel tape ring		10	
MSS heat storage module with lining 20 cm, double-layered		1	
MSS base plate 100		4	
MSS elbow 90°		1	
MSSI insulating block 20x30 cm		2	
MSSI insulating block 30x30 cm		1	
MSS glue Thermofix 1000 1 kg		2	
Thermal concrete cladding BSG 02 (high)		1	
MSS handle with rotating part		1	

Available variants:

Front variants:				
Door frame, black		SET211492		**14118,50**

Energy efficiency index A +

BSG 02 high right side with MSS heat storage set standing on top + EAS

Set consists of:	Art.-Nr.	No.	Price
GOT 45/67/44-ZL R, single glazing two-piece ceramic glass		1	
Door frame		1	
GOF 50x35		1	
MSS elbow 90° with lining, double-layered		1	
MSS elbow 90°		3	
MSS outlet block ⌀180		1	
MSS elbow 90°		2	
MSS heat storage module 10 cm		1	
MSS steel tape ring		10	
MSS heat storage module with lining 20 cm, double-layered		1	
MSS base plate 100		4	
MSS elbow 90°		1	
MSSI insulating block 20x30 cm		2	
MSSI insulating block 30x30 cm		1	
MSS glue Thermofix 1000 1 kg		2	
Thermal concrete cladding BSG 02 (high)		1	
EAS (see page 189)		1	
Mounting box		1	
Door switch wiring 3 lm		1	
Thermocouple wiring 3 lm		1	
Bus wiring 3 lm		1	
MSS handle with rotating part		1	

Additional options			
Reduced price for EAS without display			-214,50

Available variants:

Front variants:				
Door frame, black		SET211494		**16420,00**

Energy efficiency index A +

Glazing formats

Flat glazing

from page 274

HKD 7

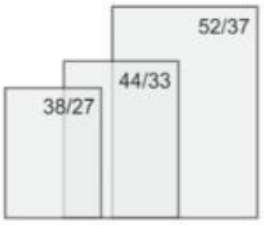

HKD Glass panes

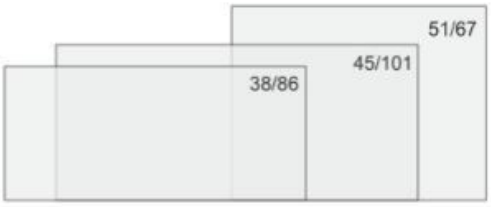

KK-Glass panes

Door dimensions height x width in cm

Tunnel formats

from page 292

HKD 7

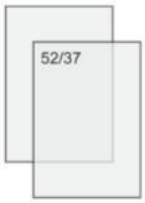

HKD 2.2.
HKD 2.2 XL

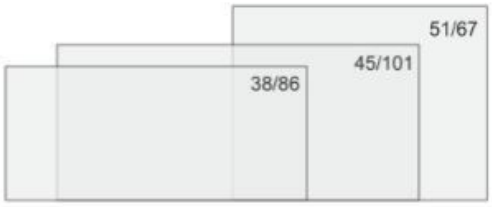

KK-Glass panes

Door dimensions height x width in cm

Eck corners

from page 306

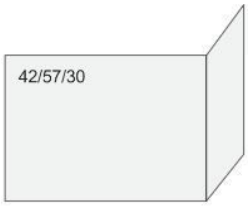

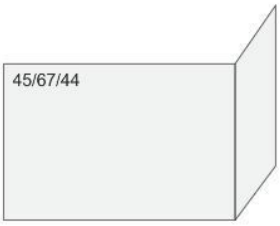

KK Glass panes

Door dimensions height x width in cm

Door frame - mounting frame HKD

Door frame

Mounting frame

Cast iron frame

Steel front plate
42 x 79 cm

Cast iron front plate
42 x 79 cm

Steel front plate
48 x 83 cm

Door frame
R = 330

Mounting frame
R = 380

Door frame - mounting frame Fireplace waterbearing

Door frame

Mounting frame 50 mm

Mounting frame 70 mm

Supplementary equipment

EAS Combustion controls with potential-free relay (without additional functions) consisting of display, 1 x flush-mount box, door switch, thermocouple & bus line, each 2 m long. Preassembled EAS/EOS components, door switch, thermocouple, motor box with transmission and ø 125 mm air flap, flexible hose with adjustable clamps

EOS Combustion control with graphic touchscreen display and additional functions (differential temperature control, Moritz's flap control) consisting of: Display with control unit, 2 x flush-mount box, door switch, thermocouple, bus and connecting line, each 2 m long, 4 x water sensors with immersion sleeve and 2x extension cable 3 m. Preassembled EOS components: door switch, thermocouple, motor box with transmission and ø 125 mm air flap, flexible hose with adjustable clamps

HKD 2.6.k SK side-opening door flat glass

Set consists of:	Art.-Nr.	No.	Price
HKD 2.6 k SK, Double glazing		1	
Door frame, mounting frame, or front plate		1	
Inner lining set for HKD 2.6 k SK		1	
Upper lining HKD 2.6 k SK		1	
Support bearing HKD 2.6 k SK		1	

Additional options			
EAS (see page 273)			2264,00
Reduced price for EAS without display			-214,50
EOS (see page 273)			4102,00
Door handle black	02056-01		130,50

Available variants:

Front variants:				
Door frame, black		SET209179		**7615,50**
Cast iron frame		SET209181		**7635,00**

Energy efficiency index A +

HKD 2.6.k SK cast iron doors

Set consists of:	Art.-Nr.	No.	Price
HKD 2.6 k SK, cast iron doors		1	
Cast iron frame, front plate		1	
Inner lining set for HKD 2.6 k SK		1	
Upper lining HKD 2.6 k SK		1	
Support bearing HKD 2.6 k SK		1	

Additional options			
EAS (see page 273)			2264,00
Reduced price for EAS without display			-214,50
EOS (see page 273)			4102,00
Door handle black	02056-01		130,50

Available variants:

Front variants:				
Cast iron frame		SET209185		**7635,00**

Energy efficiency index A +

B7 side-opening door flat glass

Set consists of:	Art.-Nr.	No.	Price
B7 with doors HKD 6.1 DF, single glazing		1	
Door frame / Cast iron frame / front plate		1	
Inner lining set for B7		1	
Upper lining B7		1	
Support bearing B7		1	

Additional options			
EAS (see page273)			2264,00
Reduced price for EAS without display			-214,50
EOS (see page273)			4102,00
Double glazing			0,00
Door handle black	02056-01		130,50

Available variants:

Front variants:				
Door frame, black		SET209045		**6829,00**
Door frame, stainless steel		SET209046		**6915,00**
Cast iron frame		SET209047		**6848,50**
Steel front plate, black 48 x 83 cm		SET209048		**7091,00**
Cast iron front plate 48 x 83 cm		SET209053		**7042,50**

Energy efficiency index A +

B7 side-opening door cast iron doors

Set consists of:	Art.-Nr.	No.	Price
B7 with doors HKD 6.1, DF, cast iron doors		1	
Cast iron frame / front plate		1	
Inner lining set for B7		1	
Upper lining B7		1	
Support bearing B7		1	

Additional options			
EAS (see page 273)			2264,00
Reduced price for EAS without display			-214,50
EOS (see page 273)			4102,00
Door handle black	02056-01		130,50

Available variants:

Front variants:				
Cast iron frame		SET209058		**6848,50**
Cast iron front plate 48 x 83 cm		SET209059		**7042,50**

Energy efficiency index A +

B8 side-opening door flat glass

Set consists of:	Art.-Nr.	No.	Price
B8 with doors, HKD 6.1 DF, single glazing		1	
Door frame / Cast iron frame / front plate		1	
Inner lining set for B8		1	
Upper lining B8		1	
Support bearing B8		1	

Additional options			
EAS (see page 273)			2264,00
Reduced price for EAS without display			-214,50
EOS (see page 273)			4102,00
Double glazing			0,00
Door handle black	02056-01		130,50

Available variants:

Front variants:				
Door frame, black		SET209060		**7463,00**
Door frame, stainless steel		SET209061		**7549,50**
Cast iron frame		SET209062		**7482,50**
Steel front plate, black 48 x 83 cm		SET209063		**7725,50**
Cast iron front plate 48 x 83 cm		SET209064		**7677,00**

Energy efficiency index A +

B8 side-opening door cast iron doors

Set consists of:	Art.-Nr.	No.	Price
B8 with doors, HKD 6.1 DF, cast iron doors		1	
Cast iron frame / front plate		1	
Inner lining set for B8		1	
Upper lining B8		1	
Support bearing B8		1	

Additional options			
EAS (see page273)			2264,00
Reduced price for EAS without display			-214,50
EOS (see page273)			4102,00
Door handle black	02056-01		130,50

Available variants:

Front variants:				
Cast iron frame		SET209070		**7482,50**
Cast iron front plate 48 x 83 cm		SET209071		**7677,00**

Energy efficiency index A +

B4 side-opening door flat glass

Set consists of:	Art.-Nr.	No.	Price
B4 with doors, HKD 4.1 DF, single glazing, with cleaning mechanism		1	
Door frame, mounting frame, or front plate		1	
Inner lining set for B4		1	
Upper lining B4		1	
Support bearing B4		1	
side/rear outlet		1	

Additional options			
EAS (see page273)			2264,00
Reduced price for EAS without display			-214,50
EOS (see page273)			4102,00
Smoke pipe connection with cover, top outlet ⌀ 180 mm for Kompaktkessel B4			0,00
Conversion kit/ extension for cleaning on front	11726		289,50
Conversion kit/extension for cleaning on side	11727		227,50
Conversion kit for cleaning on top including push-in handle	BSK2000-201		304,00
Double glazing			0,00
Door handle black	02056-01		130,50

Available variants:

Front variants:				
Door frame, black		SET209072		**11178,00**
Door frame, stainless steel		SET209073		**11291,00**
Mounting frame, black		SET208312		**11236,00**
Mounting frame, stainless steel		SET208313		**11341,00**
Cast iron frame		SET209074		**11211,50**
Steel front plate, black 48 x 83 cm		SET209075		**11400,00**
Cast iron front plate 48 x 83 cm		SET209082		**11323,00**

Smoke hood variants:

Cast iron hot air hood ⌀ 180 mm		R014022-03	1	
Front variants:				
Door frame, black		SET213106		**11593,00**
Door frame, stainless steel		SET213107		**11706,00**
Mounting frame, black		SET213108		**11651,00**
Mounting frame, stainless steel		SET213109		**11756,00**
Cast iron frame		SET213110		**11626,00**
Steel front plate, black 48 x 83 cm		SET213111		**11814,50**
Cast iron front plate 48 x 83 cm		SET213112		**11738,00**

+ **Modular accumulator MAS 440 double-layered**		R009042	5	
Cast iron dome MAS ⌀ 180		R009095-01	1	
Mounting ring		10077	1	
Front variants:				
Door frame, black		SET213113		**13368,50**
Door frame, stainless steel		SET213114		**13481,50**
Mounting frame, black		SET213115		**13426,50**
Mounting frame, stainless steel		SET213116		**13531,50**
Cast iron frame		SET213117		**13401,50**
Steel front plate, black 48 x 83 cm		SET213118		**13590,00**
Cast iron front plate 48 x 83 cm		SET213119		**13513,50**

Energy efficiency index A +

B4 side-opening door cast iron doors

Set consists of:	Art.-Nr.	No.	Price
B4 with doors HKD 4.1, cast iron doors, with cleaning mechanism		1	
Cast iron frame, front plate		1	
Inner lining set for B4		1	
Upper lining B4		1	
Support bearing B4		1	
side/rear outlet		1	

Additional options			
EAS (see page273)			2264,00
Reduced price for EAS without display			-214,50
EOS (see page273)			4102,00
Smoke pipe connection with cover, top outlet ⌀ 180 mm for Kompaktkessel B4			0,00
Conversion kit/ extension for cleaning on front	11726		289,50
Conversion kit/extension for cleaning on side	11727		227,50
Conversion kit for cleaning on top including push-in handle	BSK2000-201		304,00
Door handle black	02056-01		130,50

Available variants:

Front variants:				
Cast iron frame		SET209087		**11211,50**
Cast iron front plate 48 x 83 cm		SET209088		**11323,00**

Smoke hood variants

Cast iron hot air hood ⌀ 180 mm		R014022-03	1	
Front variants:				
Cast iron frame		SET213120		**11626,00**
Cast iron front plate 48 x 83 cm		SET213121		**11738,00**

+ **Modular accumulator MAS 440 double-layered**		R009042	5	
Cast iron dome MAS ⌀ 180		R009095-01	1	
Mounting ring		10077	1	
Front variants:				
Cast iron frame		SET213122		**13401,50**
Cast iron front plate 48 x 83 cm		SET213123		**13513,50**

Energy efficiency index A +

HKD 2.2 k SK side-opening door flat glass

Set consists of:	Art.-Nr.	No.	Price
HKD 2.2 k SK, Side-opening door, flat, single glazing		1	
Door frame, mounting frame, or front plate		1	
Inner lining set for HKD 2.2 k SK		1	
Upper lining HKD 2.2 k SK		1	
Support bearing HKD 2.2 k SK		1	

Additional options			
EAS (see page 273)			2264,00
Reduced price for EAS without display			-214,50
EOS (see page 273)			4102,00
Double glazing			232,00
Door handle black	02056-01		130,50
Option front with door HKD 2.2 round glass			Price on request

Available variants:

Front variants:				
Door frame, black		SET209165		**7525,00**
Door frame, stainless steel		SET209166		**7591,50**
Mounting frame, black		SET209167		**7671,00**
Mounting frame, stainless steel		SET209168		**7830,50**
Cast iron front plate 48 x 83 cm		SET209170		**7713,50**
Steel front plate 48 x 83 cm		SET209171		**7676,50**

Energy efficiency index A +

HKD 2.2 SK + EAS (with Moritz's flap mode)

Set consists of:	Art.-Nr.	No.	Price
HKD 2.2 SK DF side-opening door flat glass, single glazed for EAS/EOS, with cleaning mechanism		1	
Door frame or mounting frame		1	
Inner lining set for HKD 2.2 SK flat/round		1	
Upper lining HKD 2.2 SK		1	
Moritz's smoke valve		1	
EAS (see page 273)		1	
Mounting box		1	
Door switch wiring 2 lm		1	
Thermocouple wiring 2 lm		1	
Bus wiring 2 lm		1	
Connecting piece for side/rear smoke outlet ⌀ 180 mm / Boiler		1	
Connecting piece for side/rear smoke outlet ⌀ 180 mm / Reheater		1	

Additional options			
Add. charge EOS[1]			1838,00
Reduced price for EAS without display			-214,50
Smoke pipe outlet on top ⌀ 180 mm	W043140		0,00
Smoke valve actuator with insulation (10338 and 10329)[2]			1040,50
Conversion kit/ extension for cleaning on front	11726		289,50
Conversion kit/extension for cleaning on side	W043135		277,50
Double glazing			232,00
Door handle black	02056-01		130,50
Front option with HKD 2.6 door (optional double glass, simple glass or control window)			Price on request
Option front with door HKD 2.2 round glass			Price on request

Heat storage mode with Moritz's flap

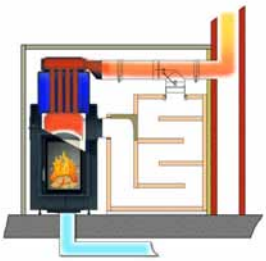

Boiler operation with Moritz's flap

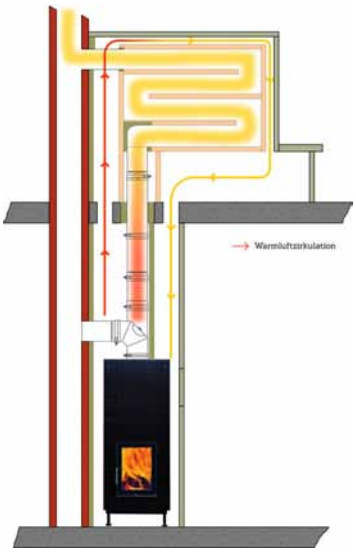

Additional option: smoke pipe connection kit instead Moritz's flap

Available variants:

Front variants:				
Door frame, black		SET209400		**14887,00**
Door frame, stainless steel		SET209401		**14954,00**
Mounting frame, black		SET209402		**15033,50**
Mounting frame, stainless steel		SET209403		**15193,00**

[1]compared to EAS: EOS control & display unit, second flush-mount box, connecting cable for control & display unit 2m long, 4x water temperature sensor with sleeve and 2x extension cable 3m long.

[2]possible only in combination with EOS.

Energy efficiency index A +

HKD 2.2 SK with direct connection + EAS

Set consists of:	Art.-Nr.	No.	Price
HKD 2.2 SK DF side-opening door flat glass, single glazed for EAS/EOS, with cleaning mechanism		1	
Door frame or mounting frame		1	
Inner lining set for HKD 2.2 SK flat/round		1	
Upper lining HKD 2.2 SK		1	
EAS (see page 273)		1	
Mounting box		1	
Door switch wiring 2 lm		1	
Thermocouple wiring 2 lm		1	
Bus wiring 2 lm		1	
Connecting piece for side/rear smoke outlet ⌀ 180 mm		1	

Additional options			
Add. charge EOS[1]			1838,00
Reduced price for EAS without display			-214,50
Smoke pipe outlet on top ⌀ 180 mm	W043140		0,00
Conversion kit/ extension for cleaning on front	11726		289,50
Conversion kit/extension for cleaning on side	W043135		277,50
Double glazing			232,00
Door handle black	02056-01		130,50
Front option with HKD 2.6 door (optional double glass, simple glass or control window)			Price on request
Option front with door HKD 2.2 round glass			Price on request

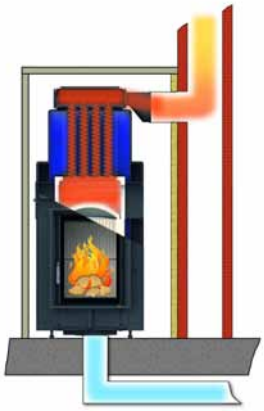

Boiler operation with direct connection

Available variants:

Front variants:				
Door frame, black		SET209414		**14225,00**
Door frame, stainless steel		SET209415		**14292,00**
Mounting frame, black		SET209416		**14371,50**
Mounting frame, stainless steel		SET209417		**14531,00**

[1]compared to EAS: EOS control & display unit, second flush-mount box, connecting cable for control & display unit 2m long, 4x water temperature sensor with sleeve and 2x extension cable 3m long.

Energy efficiency index A +

HKD 2.2 XL SK/h + EAS (with Moritz's flap mode)

Set consists of:	Art.-Nr.	No.	Price
HKD 2.2 XL SK/h DF side-opening door flat glass, single glazed for EAS/EOS with cleaning mechanism		1	
Door frame or mounting frame		1	
Inner lining set for HKD 2.2 XL SK /h flat/round		1	
Upper lining HKD 2.2 XL SK /h		1	
Moritz's smoke valve		1	
EAS (see page 273)		1	
Mounting box		1	
Door switch wiring 2 lm		1	
Thermocouple wiring 2 lm		1	
Bus wiring 2 lm		1	
Connecting piece for side/rear smoke outlet ⌀ 180 mm / Boiler		1	
Connecting piece for side/rear smoke outlet ⌀ 180 mm / Reheater		1	

Additional options			
Add. charge EOS[1]			1838,00
Reduced price for EAS without display			-214,50
Smoke pipe outlet on top ⌀ 180 mm	W043140		0,00
Smoke valve actuator with insulation (10338 and 10329)[2]			1040,50
Conversion kit/ extension for cleaning on front	11726		289,50
Conversion kit/extension for cleaning on side	W043135		277,50
Double glazing			232,00
Door handle black	02056-01		130,50
Front option with HKD 2.6 door (optional double glass, simple glass or control window)			Price on request
Option front with door HKD 2.2 round glass			Price on request

Heat storage mode with Moritz's flap

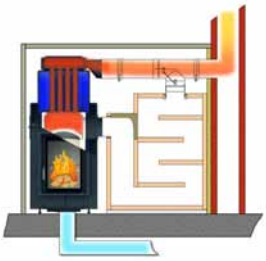

Boiler operation with Moritz's flap

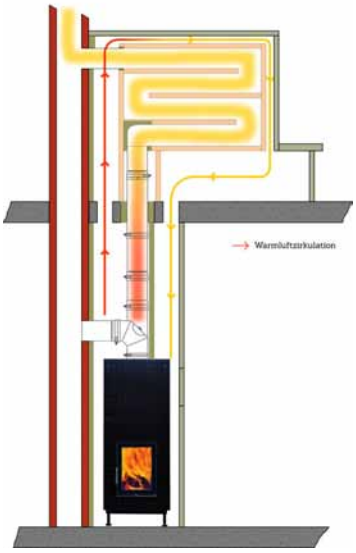

Additional option: smoke pipe connection kit instead Moritz's flap

Available variants:

Front variants:				
Door frame, black		SET209428		**15410,00**
Door frame, stainless steel		SET209429		**15476,50**
Mounting frame, black		SET209430		**15556,50**
Mounting frame, stainless steel		SET209431		**15716,00**

[1]compared to EAS: EOS control & display unit, second flush-mount box, connecting cable for control & display unit 2m long, 4x water temperature sensor with sleeve and 2x extension cable 3m long.

[2]possible only in combination with EOS.

Energy efficiency index A +

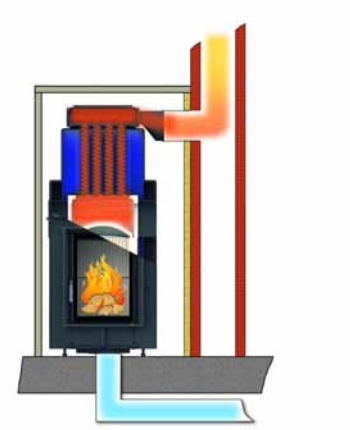

Boiler operation with direct connection

HKD 2.2 XL SK/h with direct connection + EAS

Set consists of:	Art.-Nr.	No.	Price
HKD 2.2 XL SK/h DF side-opening door flat glass, single glazed for EAS/EOS with cleaning mechanism		1	
Door frame or mounting frame		1	
Inner lining set for HKD 2.2 XL SK /h flat/round		1	
Upper lining HKD 2.2 XL SK /h		1	
EAS (see page 273)		1	
Mounting box		1	
Door switch wiring 2 lm		1	
Thermocouple wiring 2 lm		1	
Bus wiring 2 lm		1	
Connecting piece for side/rear smoke outlet ⌀ 180 mm		1	

Additional options			
Add. charge EOS[1]			1838,00
Reduced price for EAS without display			-214,50
Smoke pipe outlet on top ⌀ 180 mm	W043140		0,00
Conversion kit/ extension for cleaning on front	11726		289,50
Conversion kit/extension for cleaning on side	W043135		277,50
Double glazing			232,00
Door handle black	02056-01		130,50
Front option with HKD 2.6 door (optional double glass, simple glass or control window)			Price on request
Option front with door HKD 2.2 round glass			Price on request

Available variants:

Front variants:				
Door frame, black		SET209433		**14748,00**
Door frame, stainless steel		SET209434		**14814,50**
Mounting frame, black		SET209435		**14894,50**
Mounting frame, stainless steel		SET209436		**15054,00**

[1]compared to EAS: EOS control & display unit, second flush-mount box, connecting cable for control & display unit 2m long, 4x water temperature sensor with sleeve and 2x extension cable 3m long.

Energy efficiency index A +

HKD 7 SK + EAS (with Moritz's flap mode)

Set consists of:	Art.-Nr.	No.	Price
HKD 7 SK DF side-opening door flat glass, single glazed for EAS/EOS, with cleaning mechanism		1	
Door frame or mounting frame		1	
Inner lining set for HKD 7 SK		1	
Upper lining HKD 7 SK		1	
Moritz's smoke valve		1	
EAS (see page 273)		1	
Mounting box		1	
Door switch wiring 2 lm		1	
Thermocouple wiring 2 lm		1	
Bus wiring 2 lm		1	
Connecting piece for side/rear smoke outlet ⌀ 180 mm / Boiler		1	
Connecting piece for side/rear smoke outlet ⌀ 180 mm / Reheater		1	

Additional options			
Add. charge EOS[1]			1838,00
Reduced price for EAS without display			-214,50
Smoke pipe outlet on top ⌀ 180 mm	W043140		0,00
Smoke valve actuator with insulation (10338 and 10329)[2]			1040,50
Conversion kit/ extension for cleaning on front	11726		289,50
Conversion kit/extension for cleaning on side	W043135		277,50
Conversion kit for cleaning on top including push-in handle	BSO5000-123		307,50
Double glazing			232,00
Door handle black	02056-01		130,50

Heat storage mode with Moritz's flap

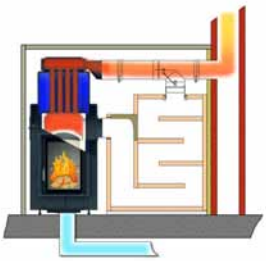

Boiler operation with Moritz's flap

Available variants:

Front variants:				
Door frame, black		SET213002		**16807,00**
Mounting frame, black		SET213003		**16786,50**

[1]compared to EAS: EOS control & display unit, second flush-mount box, connecting cable for control & display unit 2m long, 4x water temperature sensor with sleeve and 2x extension cable 3m long.

[2]possible only in combination with EOS.

Energy efficiency index A +

HKD 7 SK with direct connection + EAS

Set consists of:	Art.-Nr.	No.	Price
HKD 7 SK DF side-opening door flat glass, single glazed for EAS/EOS, with cleaning mechanism		1	
Door frame or mounting frame		1	
Inner lining set for HKD 7 SK		1	
Upper lining HKD 7 SK		1	
EAS (see page 273)		1	
Mounting box		1	
Door switch wiring 2 lm		1	
Thermocouple wiring 2 lm		1	
Bus wiring 2 lm		1	
Connecting piece for side/rear smoke outlet ⌀ 180 mm		1	

Additional options			
Add. charge EOS[1]			1838,00
Reduced price for EAS without display			-214,50
Smoke pipe outlet on top ⌀ 180 mm	W043140		0,00
Conversion kit/ extension for cleaning on front	11726		289,50
Conversion kit/extension for cleaning on side	W043135		277,50
Conversion kit for cleaning on top including push-in handle	BSO5000-123		307,50
Double glazing			232,00
Door handle black	02056-01		130,50

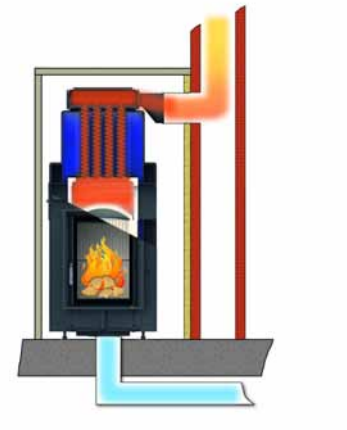

Boiler operation with direct connection

Available variants:

Front variants:				
Door frame, black		SET213004		**16145,00**
Mounting frame, black		SET213005		**16124,50**

[1]compared to EAS: EOS control & display unit, second flush-mount box, connecting cable for control & display unit 2m long, 4x water temperature sensor with sleeve and 2x extension cable 3m long.

Energy efficiency index A +

Stil-Kamin 51/67 side-opening door, single glazing, with top-mount boiler

Auslaufartikel

Set consists of:	Art.-Nr.	No.	Price
Stil-Kamin 51/67, side-opening door, single glazing		1	
Door frame		1	
Chamotte lining set Stil 51/67		1	
ISO upper lining / deflection		1	
Top-mount boiler		1	

Additional options			
EAS (see page 273)			2264,00
Reduced price for EAS without display			-214,50
EOS (see page 273)			4102,00
Smoke pipe adapter for horizontal outlet	BSK7000-129		588,00
Exchange connectiong piece⌀ 180 mm	I058043		111,50
Double glazing			419,00

Available variants:

Front variants:				
Door frame, black		SET210553		**8442,50**

Energy efficiency index A +

Auslaufartikel

Stil-Kamin 51/67 lifting door, single glazing, with top-mount boiler

Set consists of:	Art.-Nr.	No.	Price
Stil-Kamin 51/67, lifting door, single glazing		1	
Door frame or mounting frame		1	
Chamotte lining set Stil 51/67		1	
ISO upper lining / deflection		1	
Top-mount boiler		1	

Additional options			
EAS (see page 273)			2264,00
Reduced price for EAS without display			-214,50
EOS (see page 273)			4102,00
Smoke pipe adapter for horizontal outlet	BSK7000-129		588,00
Exchange connectiong piece⌀ 180 mm	I058043		111,50
Double glazing			419,00
Counterweights for non-self closing door	49097		67,50

Available variants:

Front variants:				
Door frame, black		SET210555		**9680,00**
Mounting frame, black, 50 mm		SET210557		**9680,00**
Mounting frame, black, 70 mm		SET210559		**9773,00**

Energy efficiency index A +

Architektur-Kamin 38/86, lifting door with top-mount boiler

Auslaufartikel

Set consists of:	Art.-Nr.	No.	Price
AK 38/86, lifting door, single glazing		1	
Door frame or mounting frame		1	
Inner lining set for Stil AK 38/86		1	
ISO upper lining / deflection		1	
Top-mount boiler AK 38/86		1	

Additional options			
EAS (see page 273)			2264,00
Reduced price for EAS without display			-214,50
EOS (see page 273)			4102,00
Smoke pipe adapter for horizontal/vertical outlet	BSK7000-129		588,00
Exchange connectiong piece⌀ 180 mm	I058043		111,50
Double glazing			464,00

Available variants:

Front variants:				
Door frame, black		SET208761		**11719,50**
Mounting frame, black, 50 mm		SET208763		**11652,00**
Mounting frame, black, 70 mm		SET208923		**11682,00**

Energy efficiency index A +

Auslaufartikel

Architektur-Kamin 45/101, lifting door with top-mount boiler

Set consists of:	Art.-Nr.	No.	Price
AK 45/101, lifting door, single glazing		1	
Door frame or mounting frame		1	
Inner lining set for Stil AK 45/101		1	
ISO upper lining / deflection		1	
Top-mount boiler AK 45/101		1	

Additional options			
EAS (see page 273)			2264,00
Reduced price for EAS without display			-214,50
EOS (see page 273)			4102,00
Smoke pipe adapter for horizontal outlet	I019490		433,50
Double glazing			587,50
Counterweights for non-self closing door	49097		67,50

Available variants:

Front variants:				
Door frame, black		SET205287		**12103,00**
Mounting frame, black, 50 mm		SET205289		**12033,50**
Mounting frame, black, 70 mm		SET208925		**12086,00**

Energy efficiency index A +

Boiler module flat glass

Set consists of:	Art.-Nr.	No.	Price
Boiler module rear outlet		1	2755,00

Additional options			
Conversion kit for top outlet	W027082		206,00

possible combinations:

BKH (from page 12)

HKD 2.2 SK Tunnel + EAS (with Moritz's flap mode)

Set consists of:	Art.-Nr.	No.	Price
HKD 2.2 SK DF/DF side-opening door flat glass, Tunnelsingle glazed for EAS/EOS, with cleaning mechanism		1	
Door frame or mounting frame		2	
Inner lining set for HKD 2.2 SK Tunnel flat/round		1	
Upper lining HKD 2.2 SK		1	
Moritz's smoke valve		1	
EAS (see page 273)		1	
Mounting box		1	
Door switch wiring 2 lm		1	
Thermocouple wiring 2 lm		1	
Bus wiring 2 lm		1	
Connecting piece for side/rear smoke outlet ⌀ 180 mm		1	
Smoke pipe connecting piece ⌀ 180 mm Side		1	

Additional options			
Add. charge EOS[1]			1838,00
Reduced price for EAS without display			-214,50
Smoke pipe outlet on top ⌀ 180 mm	W043140		0,00
Smoke valve actuator with insulation (10338 and 10329)[2] (EOS 6 is required)			1040,50
Conversion kit/ extension for cleaning on front	11726		289,50
Conversion kit/extension for cleaning on side	W043135		277,50
Double glazing			464,00
Door lock as revision handle	02429		101,50
Door handle black	02056-01		130,50
Option front with door HKD 2.2 round glass			Price on request

Heat storage mode with Moritz's flap

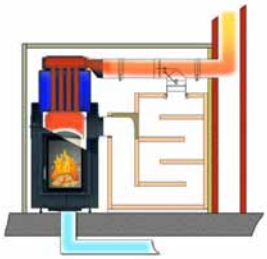

Boiler operation with Moritz's flap

Available variants:

Front variants:				
Door frame, black		SET209407		**16986,00**
Door frame, stainless steel		SET209408		**17119,50**
Mounting frame, black		SET209409		**17279,00**
Mounting frame, stainless steel		SET209410		**17598,00**

[1]compared to EAS: EOS control & display unit, second flush-mount box, connecting cable for control & display unit 2m long, 4x water temperature sensor with sleeve and 2x extension cable 3m long.

[2]possible only in combination with EOS.

Energy efficiency index A +

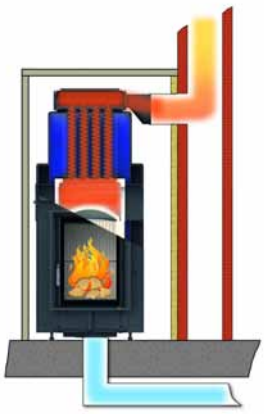

Boiler operation with direct connection

HKD 2.2 SK Tunnel with direct connection incl. EAS

Set consists of:	Art.-Nr.	No.	Price
HKD 2.2 SK DF/DF side-opening door flat glass, Tunnelsingle glazed for EAS/EOS, with cleaning mechanism		1	
Door frame or mounting frame		2	
Inner lining set for HKD 2.2 SK Tunnel flat/round		1	
Upper lining HKD 2.2 SK		1	
EAS (see page 273)		1	
Mounting box		1	
Door switch wiring 2 lm		1	
Thermocouple wiring 2 lm		1	
Bus wiring 2 lm		1	
Connecting piece for side/rear smoke outlet ⌀ 180 mm		1	

Additional options			
Add. charge EOS[1]			1838,00
Reduced price for EAS without display			-214,50
Smoke pipe outlet on top ⌀ 180 mm	W043140		0,00
Conversion kit/ extension for cleaning on front	11726		289,50
Conversion kit/extension for cleaning on side	W043135		277,50
Double glazing			464,00
Door lock as revision handle	02429		101,50
Door handle black	02056-01		130,50
Option front with door HKD 2.2 round glass			Price on request

Available variants:

Front variants:				
Door frame, black		SET209421		**16324,00**
Door frame, stainless steel		SET209422		**16457,50**
Mounting frame, black		SET209423		**16617,00**
Mounting frame, stainless steel		SET209424		**16936,00**

[1]compared to EAS: EOS control & display unit, second flush-mount box, connecting cable for control & display unit 2m long, 4x water temperature sensor with sleeve and 2x extension cable 3m long.

Energy efficiency index A +

HKD 2.2 XL SK /h Tunnel + EAS (with Moritz's flap mode)

Set consists of:	Art.-Nr.	No.	Price
HKD 2.2 XL SK/h DF/DF side-opening door flat glass, Tunnel, single glazed for EAS/EOS, with cleaning mechanism		1	
Door frame or mounting frame		2	
Inner lining set for HKD 2.2 XL SK/h Tunnel flat/ round		1	
Upper lining HKD 2.2 XL SK/h		1	
Moritz's smoke valve		1	
EAS (see page 273)		1	
Mounting box		1	
Door switch wiring 2 lm		1	
Thermocouple wiring 2 lm		1	
Bus wiring 2 lm		1	
Connecting piece for side/rear smoke outlet ⌀ 180 mm		1	
Smoke pipe connecting piece ⌀ 180 mm Side		1	

Additional options			
Add. charge EOS[1]			1838,00
Reduced price for EAS without display			-214,50
Smoke pipe outlet on top ⌀ 180 mm	W043140		0,00
Smoke valve actuator with insulation (10338 and 10329)[2] (EOS 6 is required)			1040,50
Conversion kit/ extension for cleaning on front	11726		289,50
Conversion kit/extension for cleaning on side	W043135		277,50
Double glazing			464,00
Door lock as revision handle	02429		101,50
Door handle black	02056-01		130,50
Option front with door HKD 2.2 round glass			Price on request

Heat storage mode with Moritz's flap

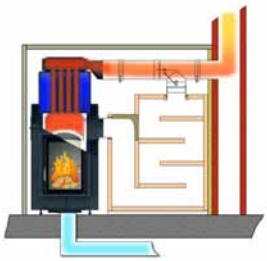

Boiler operation with Moritz's flap

Available variants:

Front variants:				
Door frame, black		SET209438		**17504,50**
Door frame, stainless steel		SET209439		**17638,00**
Mounting frame, black		SET209440		**17797,50**
Mounting frame, stainless steel		SET209441		**18116,50**

[1]compared to EAS: EOS control & display unit, second flush-mount box, connecting cable for control & display unit 2m long, 4x water temperature sensor with sleeve and 2x extension cable 3m long.

[2]possible only in combination with EOS.

Energy efficiency index A +

HKD 2.2 XL SK /h Tunnel with direct connection incl. EAS

Set consists of:	Art.-Nr.	No.	Price
HKD 2.2 XL SK/h DF/DF side-opening door flat glass, Tunnel, single glazed for EAS/EOS, with cleaning mechanism		1	
Door frame or mounting frame		2	
Inner lining set for HKD 2.2 XL SK/h Tunnel flat/ round		1	
Upper lining HKD 2.2 XL SK/h		1	
EAS (see page 273)		1	
Mounting box		1	
Door switch wiring 2 lm		1	
Thermocouple wiring 2 lm		1	
Bus wiring 2 lm		1	
Connecting piece for side/rear smoke outlet ⌀ 180 mm		1	

Additional options			
Add. charge EOS[1]			1838,00
Reduced price for EAS without display			-214,50
Smoke pipe outlet on top ⌀ 180 mm	W043140		0,00
Conversion kit/ extension for cleaning on front	11726		289,50
Conversion kit/extension for cleaning on side	W043135		277,50
Double glazing			464,00
Door lock as revision handle	02429		101,50
Door handle black	02056-01		130,50
Option front with door HKD 2.2 round glass			Price on request

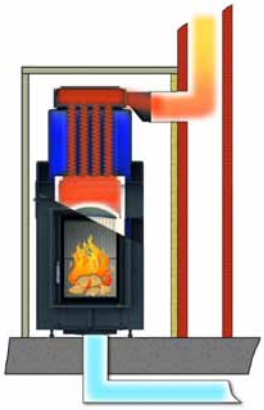

Boiler operation with direct connection

Available variants:

Front variants:				
Door frame, black		SET209443		**16842,50**
Door frame, stainless steel		SET209444		**16976,00**
Mounting frame, black		SET209445		**17135,50**
Mounting frame, stainless steel		SET209446		**17454,50**

[1]compared to EAS: EOS control & display unit, second flush-mount box, connecting cable for control & display unit 2m long, 4x water temperature sensor with sleeve and 2x extension cable 3m long.

Energy efficiency index A +

HKD 7 SK Tunnel + EAS (with Moritz's flap mode)

Set consists of:	Art.-Nr.	No.	Price
HKD 7 SK DF/DF side-opening door flat glass, Tunnel single glazed for EAS/EOS, with cleaning mechanism		1	
Door frame or mounting frame		2	
Inner lining set for HKD 7 SK Tunnel		1	
Upper lining HKD 7 SK		1	
Moritz's smoke valve		1	
EAS (see page 273)		1	
Mounting box		1	
Door switch wiring 2 lm		1	
Thermocouple wiring 2 lm		1	
Bus wiring 2 lm		1	
Connecting piece for side/rear smoke outlet ⌀ 180 mm		1	
Smoke pipe connecting piece ⌀ 180 mm Side		1	

Additional options			
Add. charge EOS[1]			1838,00
Reduced price for EAS without display			-214,50
Smoke pipe outlet on top ⌀ 180 mm	W043140		0,00
Smoke valve actuator with insulation (10338 and 10329)[2] (EOS 6 is required)			1040,50
Conversion kit/ extension for cleaning on front	11726		289,50
Conversion kit/extension for cleaning on side	W043135		277,50
Conversion kit for cleaning on top including push-in handle	BSO5000-123		307,50
Double glazing			464,00
Door handle black	02056-01		130,50

Heat storage mode with Moritz's flap

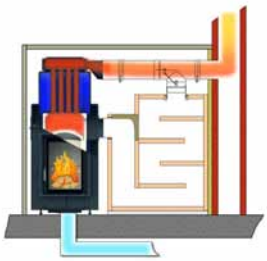

Boiler operation with Moritz's flap

Available variants:

Front variants:				
Door frame, black		SET213006		**19302,50**
Mounting frame, black		SET213007		**19262,00**

[1]compared to EAS: EOS control & display unit, second flush-mount box, connecting cable for control & display unit 2m long, 4x water temperature sensor with sleeve and 2x extension cable 3m long.

[2]possible only in combination with EOS.

Energy efficiency index A +

HKD 7 SK Tunnel with direct connection incl. EAS

Set consists of:	Art.-Nr.	No.	Price
HKD 7 SK DF/DF side-opening door flat glass, Tunnel single glazed for EAS/EOS, with cleaning mechanism		1	
Door frame or mounting frame		2	
Inner lining set for HKD 7 SK Tunnel		1	
Upper lining HKD 7 SK		1	
EAS (see page 273)		1	
Mounting box		1	
Door switch wiring 2 lm		1	
Thermocouple wiring 2 lm		1	
Bus wiring 2 lm		1	
Connecting piece for side/rear smoke outlet ⌀ 180 mm		1	

Additional options			
Add. charge EOS[1]			1838,00
Reduced price for EAS without display			-214,50
Smoke pipe outlet on top ⌀ 180 mm	W043140		0,00
Conversion kit/ extension for cleaning on front	11726		289,50
Conversion kit/extension for cleaning on side	W043135		277,50
Conversion kit for cleaning on top including push-in handle	BSO5000-123		307,50
Double glazing			464,00
Door handle black	02056-01		130,50

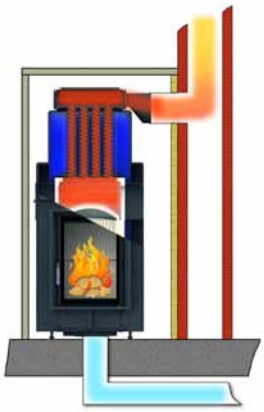

Boiler operation with direct connection

Available variants:

Front variants:				
Door frame, black		SET213008		**18640,50**
Mounting frame, black		SET213009		**18600,00**

[1]compared to EAS: EOS control & display unit, second flush-mount box, connecting cable for control & display unit 2m long, 4x water temperature sensor with sleeve and 2x extension cable 3m long.

Energy efficiency index A +

Auslaufartikel

Stil-Kamin Tunnel 51/67 ST/DT, single glazing, with top-mount boiler

Set consists of:	Art.-Nr.	No.	Price
Stil-Kamin Tunnel, 51/67 ST/DT, single glazing		1	
Door frame or mounting frame		2	
Chamotte lining set Stil Tunnel 51/67		1	
ISO upper lining / deflection		1	
Top-mount boiler		1	

Additional options			
EAS (see page 273)			2474,50
Reduced price for EAS without display			-214,50
EOS (see page 273)			4312,50
Smoke pipe adapter for horizontal/vertical outlet	BSK7000-129		588,00
Counterweights for non-self closing door	49097		67,50
Double glazing			838,00
Revision handle	02426		188,50
Version with 2 lifting doors upon request			

Available variants:

Front variants:				
Door frame, black		SET210564		**13345,00**
Door frame, black DT Mounting frame, black ST 50 mm		SET210566		**13345,00**
Door frame, black DT Mounting frame, black ST 70 mm		SET210568		**13438,00**

Energy efficiency index A +

Architektur-Kamin Tunnel 38/86, lifting/tilting door, with top-mount boiler

Auslaufartikel

Set consists of:	Art.-Nr.	No.	Price
AK Tunnel 38/86, ST/KT, single glazing		1	
Door frame or mounting frame		2	
Inner lining set for Stil AK Tunnel 38/86		1	
ISO upper lining / deflection		1	
Top-mount boiler AK 38/86		1	

Additional options			
EAS (see page 273)			2264,00
Reduced price for EAS without display			-214,50
EOS (see page 273)			4102,00
Smoke pipe adapter for horizontal/vertical outlet	BSK7000-129		588,00
Exchange connectiong piece⌀ 180 mm	I058043		111,50
Double glazing (also one side only available on request)			928,00
Counterweights for non-self closing door	49097		67,50
Version with 2 lifting doors upon request			

Available variants:

Front variants:				
Door frame, black		SET208767		**14894,50**
Mounting frame, black, 50 mm		SET208769		**14759,50**
Mounting frame, black, 70 mm		SET208924		**14819,00**

Energy efficiency index A +

Auslaufartikel

Architektur-Kamin Tunnel 45/101, ST/KT, with top-mount boiler

Set consists of:	Art.-Nr.	No.	Price
Fireplace waterbearing Tunnel AK 45/101, single glazing		1	
Door frame or mounting frame		2	
Inner lining set for Fireplace waterbearing Tunnel 45/101		1	
ISO upper lining / deflection		1	
Top-mount boiler AK 45/101		1	

Additional options			
EAS (see page 273)			2264,00
Reduced price for EAS without display			-214,50
EOS (see page 273)			4102,00
Smoke pipe adapter for horizontal outlet	I019490		433,50
Double glazing			1174,50
Counterweights for non-self closing door	49097		67,50
Version with 2 lifting doorsupon request			

Available variants:

Front variants:				
Door frame, black		SET208281		**15567,00**
Mounting frame, black, 50 mm		SET208283		**15428,00**
Mounting frame, black, 70 mm		SET208926		**15532,50**

Energy efficiency index A +

Boiler module Tunnel

Set consists of:	Art.-Nr.	No.	Price
Boiler module rear outlet		1	2755,00

Additional options			
Conversion kit for top outlet	W027082		206,00

possible combinations:

BKH (from page 34)

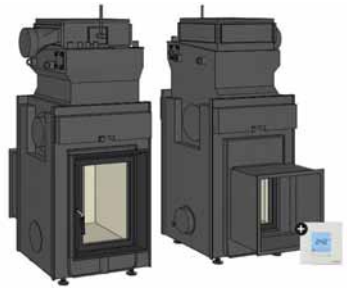

Heat storage mode with Moritz's flap

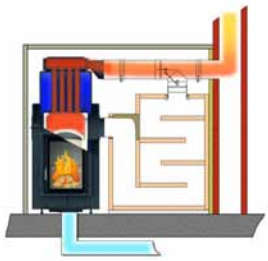

Boiler operation with Moritz's flap

HKD 2.2 SK + EAS DHT M (with Moritz's flap mode)

Set consists of:	Art.-Nr.	No.	Price
HKD 2.2 SK DF side-opening door flat glass, single glazed for EAS/EOS, with cleaning mechanism DHT M		1	
Door frame or mounting frame		1	
Inner lining set for HKD 2.2 SK flat/round		1	
Upper lining HKD 2.2 SK		1	
Moritz's smoke valve		1	
EAS (see page 273)		1	
Mounting box		1	
Door switch wiring 2 lm		1	
Thermocouple wiring 2 lm		1	
Bus wiring 2 lm		1	
Connecting piece for side/rear smoke outlet ⌀ 180 mm		1	
Smoke pipe connecting piece ⌀ 180 mm Side		1	

Additional options			
Add. charge EOS[1]			1838,00
Reduced price for EAS without display			-214,50
Smoke pipe outlet on top ⌀ 180 mm	W043140		0,00
Smoke valve actuator with insulation (10338 and 10329)[2]			1040,50
Double glazing			232,00
Revision handle	02429		101,50
Door handle black	02056-01		130,50
Option front with door HKD 2.2 round glass			Price on request

Available variants:

Front variants:				
Door frame, black		SET212281		**16582,00**
Door frame, stainless steel		SET212282		**16649,00**
Mounting frame, black		SET212283		**16728,50**
Mounting frame, stainless steel		SET212284		**16888,00**

[1]compared to EAS: EOS control & display unit, second flush-mount box, connecting cable for control & display unit 2m long, 4x water temperature sensor with sleeve and 2x extension cable 3m long.

[2]possible only in combination with EOS.

Energy efficiency index A +

HKD 2.2 SK + EAS DHT M with direct connection

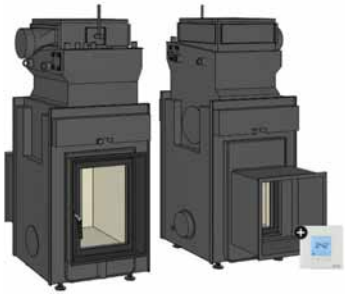

Set consists of:	Art.-Nr.	No.	Price
HKD 2.2 SK DF side-opening door flat glass, single glazed for EAS/EOS DHT M		1	
Door frame or mounting frame		1	
Inner lining set for HKD 2.2 SK flat/round		1	
Upper lining HKD 2.2 SK		1	
EAS (see page 273)		1	
Mounting box		1	
Door switch wiring 2 lm		1	
Thermocouple wiring 2 lm		1	
Bus wiring 2 lm		1	
Connecting piece for side/rear smoke outlet ⌀ 180 mm		1	

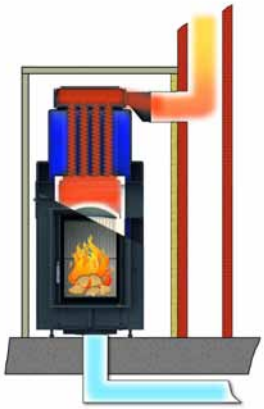

Boiler operation with direct connection

Additional options			
Add. charge EOS[1]			1838,00
Reduced price for EAS without display			-214,50
Smoke pipe outlet on top ⌀ 180 mm	W043140		0,00
Double glazing			232,00
Revision handle	02429		101,50
Door handle black	02056-01		130,50
Option front with door HKD 2.2 round glass			Price on request

Available variants:

Front variants:				
Door frame, black		SET212286		**15920,50**
Door frame, stainless steel		SET212287		**15987,00**
Mounting frame, black		SET212288		**16066,50**
Mounting frame, stainless steel		SET212289		**16226,00**

[1]compared to EAS: EOS control & display unit, second flush-mount box, connecting cable for control & display unit 2m long, 4x water temperature sensor with sleeve and 2x extension cable 3m long.

Energy efficiency index A +

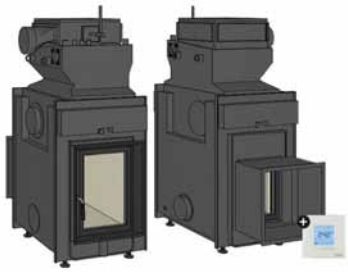

Heat storage mode with Moritz's flap

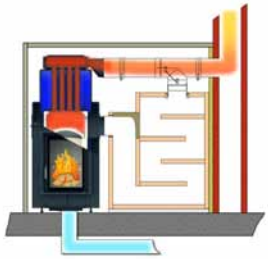

Boiler operation with Moritz's flap

HKD 2.2 XL SK/h + EAS DHT M (with Moritz's flap mode)

Set consists of:	Art.-Nr.	No.	Price
HKD 2.2 XL SK/h DF side-opening door flat glass, single glazed for EAS/EOS with cleaning mechanism DHT M		1	
Door frame or mounting frame		1	
Inner lining set for HKD 2.2 XL SK /h flat/round		1	
Upper lining HKD 2.2 XL SK /h		1	
Moritz's smoke valve		1	
EAS (see page 273)		1	
Mounting box		1	
Door switch wiring 2 lm		1	
Thermocouple wiring 2 lm		1	
Bus wiring 2 lm		1	
Connecting piece for side/rear smoke outlet ⌀ 180 mm		1	
Smoke pipe connecting piece ⌀ 180 mm Side		1	

Additional options			
Add. charge EOS[1]			1838,00
Reduced price for EAS without display			-214,50
Rauchrohrabgang oben ⌀ 180 mm	W043140		0,00
Smoke valve actuator with insulation (10338 and 10329)			1040,50
Double glazing			232,00
Revision handle	02429		101,50
Door handle black	02056-01		130,50
Option front with door HKD 2.2 round glass			Price on request

Available variants:

Front variants:				
Door frame, black		SET212291		**17105,50**
Door frame, stainless steel		SET212292		**17172,50**
Mounting frame, black		SET212293		**17252,00**
Mounting frame, stainless steel		SET212294		**17411,50**

[1]compared to EAS: EOS control & display unit, second flush-mount box, connecting cable for control & display unit 2m long, 4x water temperature sensor with sleeve and 2x extension cable 3m long.

[2]possible only in combination with EOS.

Energy efficiency index A +

HKD 2.2 XL SK/h + EAS DHT M with direct connection

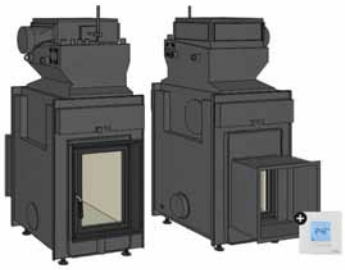

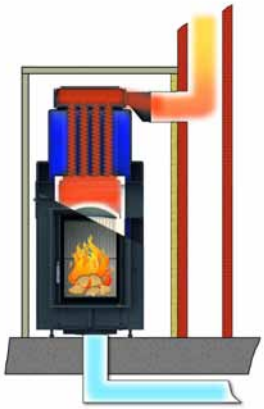

Boiler operation with direct connection

Set consists of:	Art.-Nr.	No.	Price
HKD 2.2 XL SK/h DF side-opening door flat glass, single glazed for EAS/EOS with cleaning mechanism DHT M		1	
Door frame or mounting frame		1	
Inner lining set for HKD 2.2 XL SK /h flat/round		1	
Upper lining HKD 2.2 XL SK /h		1	
EAS (see page 273)		1	
Mounting box		1	
Door switch wiring 2 lm		1	
Thermocouple wiring 2 lm		1	
Bus wiring 2 lm		1	
Connecting piece for side/rear smoke outlet ⌀ 180 mm		1	

Additional options			
Add. charge EOS[1]			1838,00
Reduced price for EAS without display			-214,50
Smoke pipe outlet on top ⌀ 180 mm	W043140		0,00
Double glazing			232,00
Revision handle	02429		101,50
Door handle black	02056-01		130,50
Option front with door HKD 2.2 round glass			Price on request

Available variants:

Front variants:				
Door frame, black		SET212296		**16443,50**
Door frame, stainless steel		SET212297		**16510,50**
Mounting frame, black		SET212298		**16590,00**
Mounting frame, stainless steel		SET212299		**16749,50**

[1]compared to EAS: EOS control & display unit, second flush-mount box, connecting cable for control & display unit 2m long, 4x water temperature sensor with sleeve and 2x extension cable 3m long.

Energy efficiency index A +

Corner fireplace waterbearing 42/57/30 left side, side-opening door

Set consists of:	Art.-Nr.	No.	Price
Corner fireplace waterbearing 42/57/30 left side, side-opening door two-piece ceramic glass, outlet ⌀ 180 mm		1	
Door frame or mounting frame		1	
Inner lining set, bright, for Kamin-Kessel Eck 42/57/30 l/r		1	

Additional options			
EAS (see page 273)			2264,00
Reduced price for EAS without display			-214,50
EOS (see page 273)			4102,00

Available variants:

Front variants:				
Mounting frame, black 50 mm		SET213018		**8592,50**
Door frame		SET213067		**8499,00**

Energy efficiency index A +

Corner fireplace waterbearing 42/57/30 right side, side-opening door

Set consists of:	Art.-Nr.	No.	Price
Corner fireplace waterbearing 42/57/30 right side, side-opening door two-piece ceramic glass, outlet ⌀ 180 mm		1	
Door frame or mounting frame		1	
Inner lining set, bright, for Kamin-Kessel Eck 42/57/30 l/r		1	

Additional options			
EAS (see page 273)			2264,00
Reduced price for EAS without display			-214,50
EOS (see page 273)			4102,00

Available variants:

Front variants:				
Mounting frame, black 50 mm		SET213019		**8592,50**
Door frame		SET213068		**8499,00**

Energy efficiency index A +

Corner fireplace waterbearing 45/67/44 left side, lifting door

Set consists of:	Art.-Nr.	No.	Price
Corner fireplace waterbearing 45/67/44 left side, lifting door two-piece ceramic glass, outlet ⌀ 180 mm		1	
Mounting frame		1	
Inner lining set, bright, for Kamin-Kessel Eck 45/67/44 l/r		1	
ISO upper lining		1	

Additional options			
EAS (see page 273)			2264,00
Reduced price for EAS without display			-214,50
EOS (see page 273)			4102,00
Counterweights for non-self closing door	49097		67,50
Conversion kit/ extension for cleaning on front	11726		289,50
Conversion kit/extension for cleaning on side	W043135		277,50
Conversion kit for cleaning on top including push-in handle	BSK2000-201		304,00

Available variants:

Front variants:				
Mounting frame, black, 50 mm		SET212984		**11496,50**
Mounting frame, black, 70 mm		SET212986		**11693,00**

Energy efficiency index A +

Corner fireplace waterbearing 45/67/44 right side, lifting door

Set consists of:	Art.-Nr.	No.	Price
Corner fireplace waterbearing 45/67/44 right side, lifting door two-piece ceramic glass, outlet ⌀ 180 mm		1	
Mounting frame		1	
Inner lining set, bright, for Kamin-Kessel Eck 45/67/44 l/r		1	
ISO upper lining		1	

Additional options			
EAS (see page 273)			2264,00
Reduced price for EAS without display			-214,50
EOS (see page 273)			4102,00
Counterweights for non-self closing door	49097		67,50
Conversion kit/ extension for cleaning on front	11726		289,50
Conversion kit/extension for cleaning on side	W043135		277,50
Conversion kit for cleaning on top including push-in handle	BSK2000-201		304,00

Available variants:

Front variants:				
Mounting frame, black, 50 mm		SET212989		**11496,50**
Mounting frame, black, 70 mm		SET212991		**11693,00**

Energy efficiency index A +

Boiler module Eck

Set consists of:	Art.-Nr.	No.	Price
Boiler module rear outlet		1	2755,00

Additional options			
Conversion kit for top outlet	W027082		206,00

possible combinations:

BKH (from page 54)

	Art.-Nr.	Infos	Designation	Price
Accessories Boiler technology				
	00717.1	☐	Tiled stove pump unit	1108,50
	00719.1	☐	Pump control incl. 2 pieces PT 1000	235,00
	902350	☐	Safety valve 651 HN 1/2"	52,00

BHZ - BRUNNER Heating Center

Heating Center 3.0

	Art.-Nr.	info	Designation	Price
Heating Center BHZ 15-50 kW				
For approved hydraulic diagrams, refer to Brunner Hydraulic Manual (https://www.brunner.de/produktdownloads/kessel-waermepumpen/00_brunner_hydraulik-handbuch_5_2022.pdf)				
		▬	Heating Center basic module - Hydraulic box, ready for connection, for combination with the BRUNNER system storage tank. Basic module with: - System controller with 5,7"-VGA-Touch-Display - Set of hoses for connection with storage tank, with thermal insulation	
	V009001-02		Basic module BHZ 3.0 with touch-display	7250,00
		▬	Heating Center basic module - Hydraulic box, ready for connection, for combination with the BRUNNER system storage tank. Basic module with: - System controller without 5,7"-VGA-Touch-Display - Set of hoses for connection with storage tank, with thermal insulation - Blind cover for Heating Center	
	V009001-01		BHZ 3.0 basic module **without touch-display**	5348,50
■ must be ordered ▬ make a choice ☐ optional				

	Art.-Nr.	info	Designation	Price
Heat generator				
Solid fuel module				
	V009104	■	Tiled stove circuit - motorized return flow increase - incl. integrated power measurement	1474,50

Return flow for solid fuel boiler / Collector pipe Heat generator				
	V009098	▬	Return flow for solid fuel boiler as well as collector for heat generators * without power measurement *for example: oil/gas boiler etc.	356,00
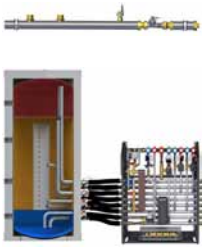	V009008-02	▬	Return flow for solid fuel boiler as well as collector for heat generators * with power measurement - System storage connection to hydraulic box on the left - connection oil/gas boiler etc. right side to the hydraulic box *for example: oil/gas boiler etc.	733,50
	V009008-01	▬	Return flow for solid fuel boiler as well as collector for heat generators * with power measurement - System storage connection to hydraulic box on the right - connection oil/gas boiler etc. left side to the hydraulic box *for example: oil/gas boiler etc.	733,50

■ must be ordered ▬ make a choice □ optional

	Art.-Nr.	info	Designation	Price
Heat generator				
Solar module				
	V009005	☐	Solar module with system separation - Collector sensor by customer - incl. integrated power measurement -Solar primary pump: Wilo Yonos Para ST 15/13 PWM 2, 130 -Solar secondary pump Wilo Yonos Para 15/6 PWM 1, 130	3316,00

Photovoltaic connection				
	V009340-01	☐	Photovoltaic connection for BHZ 3.0 for hot water preparation and heating support incl. - 2 directional energy meter - Electrical screw-in heater 9 kW with safety temperature limiter - Tube set for BHZ 3.0 - Electronic Power Controller **Upgradeable for all systems with BHZ 3.0 + System Storage 3.0.**	3468,50
ATTENTION: The PV module requires the use of the fresh water module (not possible with hot water storage- module)				

Elektro-Zentralheizungsmodul				
	V009340-03	☐	Electric central heating module BHZ 3.0 for hot water and heating incl. - Electric screw-in heater 9 kW with STB (safety temperature limiter) - Tube set for BHZ 3.0 - Electronic power controller **Upgradeable for all systems with BHZ 3.0 + System Storage 3.0.**	1928,50
CAUTION: Precondition for the electro- central heating module is the use of the fresh water module (not with hot water storage module possible)				
■ must be ordered ▬ make a choice ☐ optional				

Heat pump-integration				
	V009390	☐	Integration of air-water heat pump Brunner BWP 3/13 only for Brunner heat pump BWP	1975,50
	V009380-01	☐	Einbindung Fremdwärmepumpe bis 20 kW	1621,00
Note - when using heat pump connection, it is not possible to integrate solar module V009005 - when using heat pumps integration, only the system memory 750 liters Art-No. V009800 or 1000 liters Art. No. V009850 can be used - Heat pump integration V009390 can only be retrofitted to BHZ 3.0 if the above mentioned points are given				
■ must be ordered ▬ make a choice ☐ optional				

	Art.-Nr.	info	Designation	Price
Heat generator				
Electric heaters				
	900822	☐	Electric immersion heater 9 kW with safety temperature limit Immersion depth: 810 mm Non-heated length: 100 mm Thread size: G 1 1/2 " Degree of protection: IP 64 Mounting position: horizontal or vertical from top Star connection, suitable for continuous operation **Suitable for installation in Brunner System Storage 3.0 and all commercially available buffer tanks**	575,00
	901106		Electric screw in heater 6 kW with safety temperature limiter Immersion depth: 480 mm Length unheated: 100 mm Screw head: G 1 1/2" Protection class: IP 64 Installation: horizontal and vertical from above Star circuit, suitable for continuous operation Suitable for installation in all Brunner system storages and all standard buffers	571,50
■ must be ordered ▬ make a choice ☐ optional				

	Art.-Nr.	info	Designation	Price
Heat consumer				
Fresh water module				
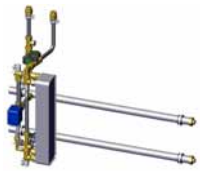	V009490	▬	Fresh water module 40 l/min: Stainless steel plate heat exchanger with copper soldering Fresh water module 40 L per minute, for fast and hygienic potable water heating in the flow process. Suitable for use in multiple family homes. - incl. integrated power measurement - Typ Wilo Para 15/8/130 PWM - incl. V009310 Insulation fresh water module BHZ - Esbe Vormischventil Typ: VTA 370	4068,50
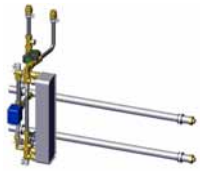	V009530	▬	Fresh water module 40 l/min: Stainless steel plate heat exchanger with nickel soldering Fresh water module 40 L per minute, for fast and hygienic potable water heating in the flow process. Suitable for use in multiple family homes. - incl. integrated power measurement - Typ Wilo Para 15/8/130 PWM - incl. V009310 Insulation fresh water module BHZ - Esbe Vormischventil Typ: VTA 370	8071,50
	V009135	☐	Circulation connection incl. pump in combination with fresh water station Circulation pump Wilo ZRS 15/4. (possible only in combination with fresh water module)	362,50
Hot water loading module				
	V005045	▬	Hot water loading module Hot water loading module for external hot water storage tank. For use in single-family houses or twin housings.	991,00
■ must be ordered ▬ make a choice ☐ optional				

	Art.-Nr.	info	Designation	Price
Heat consumer				
Heating circuit module 1				
	V009102	▬	Mixed heating circuit group 1 with power measurement Heating circuit module with pump Wilo Yonos Para 13/130, e.g. NT-type panel heaters, radiators, convectors or heating pipe systems (underfloor heating or wall-mount heating registers) with power measurement.	1474,50
	V005044	▬	Mixed heating circuit group 1 without power measurement Heating circuit module with pump Wilo Yonos Para RS 15/6 for outdoor temperature controlled operation with one heating circuit, e.g. NT-type panel heaters, radiators, convectors or heating pipe systems (underfloor heating or wall-mount heating registers) without power measurement.	1250,00

Heat consumer				
Heating circuit module 2				
	V009102	▬	Mixed heating circuit group 2 with power measurement Heating circuit module with pump Wilo Yonos Para 13/130, e.g. NT-type panel heaters, radiators, convectors or heating pipe systems (underfloor heating or wall-mount heating registers) with power measurement.	1474,50
	V005044	▬	Mixed heating circuit group 2 without power measurement Heating circuit module with pump Wilo Yonos Para RS 15/6 for outdoor temperature controlled operation with one heating circuit, e.g. NT-type panel heaters, radiators, convectors or heating pipe systems (underfloor heating or wall-mount heating registers) without power measurement.	1250,00

■ must be ordered ▬ make a choice ☐ optional

	Art.-Nr.	info	Designation	Price
Accessories for Heating Center				
	E006004-20	☐	Extension board 'Heating circuits' In wall-mount box. For outdoor temperature controlled operation with 2 additional heating circuits - 2 pcs. surface sensors Pt 1000 for heating circuit flow line, with mounting clamp -incl. connection possibility for 2 heat metering systems in combination with UK 100090-01 Connecting cable for data E013005-.. 3-wire required	1114,50
	UK100090	☐	Mixed heating circuit group 3,4,5,6, DN 25 without power measurement Heating circuit module with pump Wilo Yonos Para 25/6, for e.g. NT-type panel heaters, radiators, convectors or heating pipe systems (underfloor heating or wall-mount heating registers)	1121,50
	UK100090-01	☐	Mixed heating circuit group 3,4,5,6 DN 25 with power measurement Heating circuit group with volume flow metering, with pump Wilo Yonos Para 25/6, for e.g. NT-type panel heaters, radiators, convectors or heating pipe systems (underfloor heating or wall-mount heating registers)	1572,50
	900197	☐	Manifold 2x, DN 25 - Manifold with wall mounting bracket, for 2 heating circuit modules, or alternatively for 1 heating circuit module and 1 hot water tank loading module - Flow and Return are thermally separated, with EPP thermal insulation	509,50
	900198	☐	Manifold 3x, DN 25 - Manifold with wall mounting bracket, for 3 heating circuit modules, or alternatively for 2 pcs. heating circuit module and 1 pc. hot water tank loading module - Flow and Return are thermally separated, with EPP thermal insulation	612,50
	900199	☐	Manifold 5x, DN 25 - Manifold with wall mounting bracket, for 5 heating circuit modules, or alternatively for 4 pcs. heating circuit module and 1 pc. hot water tank loading module - Flow and Return are thermally separated, with EPP thermal insulation	1559,50
	900288	☐	Power inverter + battery box NV500/1000 For uninterrupted operation (emergency power supply) during power outages. Suitable for typical 12 Volt lead batteries for automotive or solar applications with a capacity between 65 Ah and 125 Ah (the battery is not supplied).	1097,50
	SET211001	■	Insulating shell kit consists of 2 collector pipe insulating pieces	59,50

■ must be ordered ▬ make a choice ☐ optional

	Art.-Nr.	info	Designation	Price
Accessories for Heating Center				
		☐	Mounting box Flush-mount box for installation of additional touchsensitive display.	
	900001		Standard mounting box Dimensions L x W x D = 159 x 159 x 75 mm	19,00
	E004007-01		Mounting box for dry wall installation Dimensions L x W x D = 165 x 165 x 72 mm	121,00
		☐	Connection wiring Touch-Display universal connection wiring (CAN-Bus) for data exchange between wood and pellet boilers, BHZ Heating Center and all extension boards with additional Touch-Display (5 wires)	
	E013001-2		Connection wiring 2 m	34,00
	E013001-3		Connection wiring 3 m	37,00
	E013001-4		Connection wiring 4 m	41,50
	E013001-5		Connection wiring 5 m	45,00
	E013001-7		Connection wiring 7 m	54,50
	E013001-10		Connection wiring 10 m	65,50
			Connection wiring > 10 m up to max. 30 m by metre	upon request
		☐	Connection wiring Data universal connection wiring (CAN-Bus) for data exchange between wood and pellet boilers, BHZ Heating Center and all extension boards (3 wires)	
	E013005-1		Connection wiring 0,7 m	26,00
	E013005-2		Connection wiring 2 m	30,50
	E013005-3		Connection wiring 3 m	34,00
	E013005-4		Connection wiring 4 m	37,00
	E013005-5		Connection wiring 5 m	42,00
	E013005-7		Connection wiring 7 m	48,50
	E013005-10		Connection wiring 10 m	62,50
			Connection wiring > 10 m up to max. 30 m by metre	upon request
■ must be ordered ▬ make a choice ☐ optional				

	Art.-Nr.	info	Designation	Price
Accessories for Heating Center				
		☐	Extension wiring for temperature sensor extension wiring with screen, for Pt 1000 temperature sensors	
	E013013-01		Extension wiring 3 m	51,00
	E013013-02		Extension wiring 5 m	58,00
	E013013-03		Extension wiring 10 m	84,00
	E013013-04		Extension wiring 15 m	104,50
	10339	☐	Temperature sensor with immersion sleeve for variable use, e.g. as boiler sensor for existing solid fuel boilers Temperature sensor Pt1000 with immersion sleeve DN 15 (1/2"	54,50
	900205	☐	Temperature sensor with clamping band for variable use, e.g. as boiler sensor for existing solid fuel boilers Temperature sensor Pt1000 with clamping band as contact sensor	21,00
	V009181	☐	Passage from 22 ferrule/1" male	20,50
■ must be ordered ▬ make a choice ☐ optional				

	Art.-Nr.	Infos	Designation	Price
System storage				
		i	System storage The system storage (buffer tank) is enabled for laminar loading and optimized for operation with renewable heating sources. - Efficient thermal insulation from 100 mm Polyester mats (thermal conductivity index WLG = 0,35) - Incl. 8 pcs. ball valves - Connection option for Brunner air-water heat pump BWP 3/13	
	V009800		System storage 750 l	3154,50
	V009850		System storage 1000 l	3458,50

Accessories System storage				
	900098		Automatic top-of-tank breather (for all system storage tanks)	20,50
	V005363		Horizontal venting pipe for system storage 750l und 1000l	36,50
	V006068		Horizontal venting pipe for system storage 1500l	37,50
	V008074		Horizontal venting pipe for system storage 2000 l	40,00

System storage				
		i	System storage The system storage (buffer tank) is enabled for laminar loading and optimized for operation with renewable heating sources. - Efficient thermal insulation from 100 mm Polyester mats (thermal conductivity index WLG = 0,35) - Incl. 8 pcs. ball valves	
	V006070		System storage 1500 l	4291,50
	V008080		System storage 2000 l	5232,50

Accessories System storage				
	900098		Automatic top-of-tank breather (for all system storage tanks)	20,50
	V005363		Horizontal venting pipe for system storage 750l und 1000l	36,50
	V006068		Horizontal venting pipe for system storage 1500l	37,50
	V008074		Horizontal venting pipe for system storage 2000 l	40,00

	Art.-Nr.	Infos	Designation	Price
Standard storage				
		ⓘ	Standard storage The standard storage (buffer tank) for extension of storage volume.	
	V007023		Standard storage 750 l	1797,50
	V005071		Standard storage 1000 l	2302,00
	V006048		Standard storage 1500 l	3061,50
	V008050		Standard storage 2000 l	3636,00

ⓘ System storage tank and Standard storage tank can be hydraulically connected by using a set of connecting hoses (see Accessories for storage tanks). Both tanks must be of the same size and volume.

Accessories for storage tanks				
		☐	Flexible hose connection kit insulated for hydraulic connection between System storage tank and Standard storage tank. Both tanks must be of the same size and volume.	
	900122K		Flexible hose connection kit insulated consisting of: - 8 pcs. double threaded fitting with gasket - 4 pcs. flexible hose, L=170 mm	364,50
	900123K		Flexible hose connection kit insulated consisting of: - 8 pcs. double threaded fitting with gasket - 4 pcs. flexible hose, L=450 mm	409,50
	SET211000	■	Ball valves insulation KIT consisting of 4 pcs. insulation for ball valve DN 32 with ball valve extension 4 pcs. insulation for ball valve DN 25 with ball valve extension	281,50

■ must be ordered ▬ make a choice ☐ optional

	Art.-Nr.	Infos	Designation	Price
Free installation of the extention board basic				
For approved hydraulic diagrams, refer to Brunner Hydraulic Manual (https://www.brunner.de/produktdownloads/kessel-waermepumpen/00_brunner_hydraulik-handbuch_5_2022.pdf)				
	E006004-10	■	Extension board 'Basic' In wall-mount box. For outdoor temperature controlled operation of 2 mixed heating circuits, hot water storage tank loading, incl. necessary temperature sensors (Data wiring with 3 wires is necessary for connection with boiler). - 3 pcs. storage tank sensor Pt 1000 with sleeve DN 15 (1/2") - 2 pcs. surface sensors Pt 1000 for heating circuit flow line, with mounting clamp - 1 pc. hot water storage tank temperature sensor Pt 1000 with sleeve DN 15 (1/2") - 1 pc. outdoor sensor Pt 1000 Precondition for this version: Boiler operation with EOS 6	1351,50
			Hydraulic components	
	UK100090	☐	Mixed heating circuit 1-6, DN 25 Heating circuit module with pump Wilo Yonos Para 25/6, for e.g. NT-type panel heaters, radiators, convectors or heating pipe systems (underfloor heating or wall-mount heating registers)	1121,50
	UK100100	☐	Hot water storage external loading module, DN Hot water storage loading module with pump Wilo Yonos Para 25/6, for loading of a new or already existing hot water storage tank in case of high demand for domestic hot water	764,00
■ must be ordered ▬ make a choice ☐ optional				

	Art.-Nr.	Infos	Designation	Price
Accessories for free installation				
	900197	☐	Manifold 2x, DN 25 - Manifold with wall mounting bracket, for 2 heating circuit modules, or alternatively for 1 pc. heating circuit module and 1 pc. hot water tank loading module - Flow and Return are thermally separated, with EPP thermal insulation	509,50
	900198	☐	Manifold 3x, DN 25 - Manifold with wall mounting bracket, for 3 heating circuit modules, or alternatively for 2 pcs. heating circuit module and 1 pc. hot water tank loading module - Flow and Return are thermally separated, with EPP thermal insulation	612,50
	900199	☐	Manifold 5x, DN 25 - Manifold with wall mounting bracket, for 5 heating circuit modules, or alternatively for 4 pcs. heating circuit module and 1 pc. hot water tank loading module - Flow and Return are thermally separated, with EPP thermal insulation	1559,50
	00717.1	☐	Tiled stove pump unit	1108,50
■ must be ordered ▬ make a choice ☐ optional				

Standard storage

from page 323

	Art.-Nr.	Infos	Designation	Price
Free Installation extension board 'Heating circuits'				
	E006004-20	☐	Extension board 'Heating circuits' In wall-mount box. For outdoor temperature controlled operation with 2 additional heating circuits - 2 pcs. surface sensors Pt 1000 for heating circuit flow line, with mounting clamp - incl. connection possibility for 2 heat metering systems in combination with UK 100090-01 - Connecting cable for data E013005-.. 3-wire required Precondition for this version: Boiler operation with EOS 6, Extension board 'Basic'	1114,50
Hydraulic components				
	UK100090	☐	Mixed heating circuit 1-6, DN 25 Heating circuit module with pump Wilo Yonos Para 25/6, for e.g. NT-type panel heaters, radiators, convectors or heating pipe systems (underfloor heating or wall-mount heating registers)	1121,50
	UK100090-01	☐	Mixed heating circuit group 3,4,5,6 DN 25 with power measurement Heating circuit group with volume flow metering, with pump Wilo Yonos Para 25/6, for e.g. NT-type panel heaters, radiators, convectors or heating pipe systems (underfloor heating or wall-mount heating registers)	1572,50
Accessories for free installation				
	900197	☐	Manifold 2x, DN 25 - Manifold with wall mounting bracket, for 2 heating circuit modules, or alternatively for 1 pc. heating circuit module and 1 pc. hot water tank loading module - Flow and Return are thermally separated, with EPP thermal insulation	509,50
	900198	☐	Manifold 3x, DN 25 - Manifold with wall mounting bracket, for 3 heating circuit modules, or alternatively for 2 pcs. heating circuit module and 1 pc. hot water tank loading module - Flow and Return are thermally separated, with EPP thermal insulation	612,50
	900199	☐	Manifold 5x, DN 25 - Manifold with wall mounting bracket, for 5 heating circuit modules, or alternatively for 4 pcs. heating circuit module and 1 pc. hot water tank loading module - Flow and Return are thermally separated, with EPP thermal insulation	1559,50
■ must be ordered ▬ make a choice ☐ optional				

	Art.-Nr.	Infos	Designation	Price
Free installation of the extention board of power registration for heat generator				
	E006004-40	☐	Extension board 'Performance' In wall-mount box. For heat metering and balancing of a connected additional heating, e.g. oil/gas boiler or heat pump. - Connecting cable for data E013005-.. 3-wire required Precondition for this version: Boiler operation with EOS 6, Extension board 'Basic' If only the performance of the boiler should be record-ed the extention board of Power registration can be con-nected directly to the EOS without the extention board Basic (EWP Basis).	1092,00

			Hydraulic components	
		☐	Performance Kit for measurement of heat quantity	
	900202		Set capacity up to 15 kW consists of: - flowmeter DN 15 - 2 contact sensors with clamping band	272,50
	900203		Set capacity 30-50 kW consisting of: - Flowmeter DN 20 - 2 contact sensors with clamping band	299,50
■ must be ordered ▬ make a choice ☐ optional				

	Art.-Nr.	Infos	Designation	Price
Extension board for tiled stove performance metering				
	E006004-70	☐	Extension board for tiled stove performance metering - Wall-mount box - 2 pcs. surface temperature sensor Pt 1000 - Extension kit for power measurement, with Huba sensor 5.0-85 l/min - Power metering and balancing of an additionally connected heat generator or receiver is possible Caution: Combination is possible only with BRUNNER tiled stove pump unit (Art. No. 00717.1) Connecting cable for data E013005-.. 3-wire required Precondition for this version: Boiler operation with EOS 6, Extension board 'Basic' If only the performance of the boiler should be recorded the extention board of Power registration can be connected directly to the EOS without the extention board Basic (EWP Basis).	1490,00
■ must be ordered ▬ make a choice ☐ optional				

Tiled stove pump unit

from page 324

	Art.-Nr.	Infos	Designation	Price
Free installation of the extention board Oil / Gas / Solar				
	E006004-30	☐	Extention board Oil / Gas / Solar In-wall mount box. For intergration of a thermal solar system with separate circuits, and a switch-over function (e.g, zone valve) between hot water storage tank loading or loading of a buffer tank via solar heating. Coil control of a switching valve (e.g.zone valve) for connection of oil or gas heater (requires wiring ofr data transfer between the individual extension boards, with 3 wires) - 1 x Pt 1000 temperature sensor for hot water storage with immersion sleeve DN 15 (1/2") - 1 x Pt 1000 boiler temperature sensore with immersion sleeve DN 15 (1/2") - 1 x Pt 1000 collector temperature sensor wiht immersion sleeve DN 15 (1/2") Connecting cable for data E013005-.. 3-wire required Precondition for this version: Boiler operation with EOS 6, Extension board 'Basic'	1263,50
■ must be ordered ▬ make a choice ☐ optional				

	Art.-Nr.	Infos	Designation	Price
Accessories for free installation				
		☐	Connection wiring Data universal connection wiring (CAN Bus) for data exchange between boiler, BHZ and all extension boards..	
	E013005-1		Connection wiring 0,7 m	26,00
	E013005-2		Connection wiring 2 m	30,50
	E013005-3		Connection wiring 3 m	34,00
	E013005-4		Connection wiring 4 m	37,00
	E013005-5		Connection wiring 5 m	42,00
	E013005-7		Connection wiring 7 m	48,50
	E013005-10		Connection wiring 10 m	62,50
			Connection wiring > 10 m up to max. 200 m by metre	
		☐	Extension wiring for temperature sensor extension wiring with screen, for Pt 1000 temperature sensors	
	E013013-01		Extension wiring 3 m	51,00
	E013013-02		Extension wiring 5 m	58,00
	E013013-03		Extension wiring 10 m	84,00
	E013013-04		Extension wiring 15 m	104,50

Iron Dog 01

	Art.-Nr.	No.	Price
Iron Dog 01	50000		3285,00

Energy efficiency class A

	Art.-Nr.	No.	Price
Heat protective panel (backwall) for Iron Dog 01	50130		166,00

Air supply box	Art.-Nr.	No.	Price
Air supply box	K006110		263,00

Aluflex hose	Art.-Nr.	No.	Price
Aluflex hose	N003054		69,50

Iron Dog 02

	Art.-Nr.	No.	Price
Iron Dog 02	K007088		3438,50

Energy efficiency class A

	Art.-Nr.	No.	Price
Heat protective panel (backwall) for Iron Dog 02	K007090		169,50

Air supply box	Art.-Nr.	No.	Price
Air supply box	K007101		284,00

Aluflex hose	Art.-Nr.	No.	Price
Aluflex hose	N003054		69,50

Iron Dog 04

	Art.-Nr.	No.	Price
Iron Dog 04	50030		4928,50

Energy efficiency class A

Air supply box	Art.-Nr.	No.	Price
Air supply box	K009160		339,50

Aluflex hose	Art.-Nr.	No.	Price
Aluflex hose	N003054		69,50

Iron Dog 06 with grill function

	Art.-Nr.	No.	Price
Iron Dog 06	K011001		9304,00

Energy efficiency index A +

Accessories	Art.-Nr.	No.	Price
Baking tray	K011152		180,50
Cooking grill (1 piece included in delivery of Iron Dog 06)	K011037		280,50
Double-enamelled cast iron oven-pan	K011151		196,00

Air supply box	Art.-Nr.	No.	Price
Air supply box	K011155		284,00

Aluflex hose	Price	No.	Price
Aluflex hose	N003054		69,50

Iron Dog 07

	Art.-Nr.	No.	Price
Iron Dog 07 firing door right	K012001-03		5452,50
Iron Dog 07 firing door left	K012001-04		5452,50

Energy efficiency index A +

Aluflex hose	Art.-Nr.	No.	Price
Aluflex hose	N003054		69,50

Dial thermometer

Soot cleaning door

Baking oven Kirschgarten

Article description	Art.-Nr.	Price
Baking oven door Kirschgarten	10702	1262,00
Baking oven smoke pipe connection ⌀ 180 mm	10280	539,50
Soot cleaning door 1½ tile with cast iron fittings and wooden knob	10617	351,00
Dial thermometer	900118	87,50

Mounting accessories
Soot cleaning door Art.-Nr.: 10617

	Frame external dimensions W x H in mm	Frame external dimensions W x H in mm	Dimensions of door opening W x H in mm
1 1/2-tile size	340 x 150 mm	295 x 115 mm	275 x 100 mm

Baking oven smoke pipe connection

Soot cleaning door

Dial thermometer

Baking oven Sailerhof

Article description	Art.-Nr.	Price
Baking oven door Sailerhof	10701	678,50
Baking oven smoke pipe connection ⌀ 180 mm	10703	491,00
Soot cleaning door 1½ tile with cast iron fittings and wooden knob	10617	351,00
Dial thermometer	900118	87,50

Feuer-Iglu

Cast iron doors with 2 wings

Dial thermometer

Damper ø 180 mm
with recessed handle

Baking oven Feuer-Iglu

Article description	Art.-Nr.	Price
Fire Igloo 950 with insulated lid	Q010048	3147,00
Cast iron door 2 wings, with connection block	Q010047	818,50
Dial thermometer 50 - 500 °C	900118	87,50
Damper ø 180 mm with recessed handle	900121	497,50

Baking oven Grannus

Grannus top cover for outdoor use

Side table for Grannus with support bearing

Baking oven Grannus

Article description	Art.-Nr.	Price
Baking oven Grannus Consisting of: - Grannus thermal concrete cladding - Fire Igloo - lean door - 2 x dial thermometer	Q010079	5908,00
Grannus top cover for outdoor use	Q010072	1498,50
Support bearing Grannus (set consisting of 2 pieces galvanized)	Q010102	771,50
Side table for Grannus (without cover plate)	Q010110	1806,00
Support bearing side board	Q010104	324,00

Fireplace grill 24/30

Available variants

Variant	Art.-Nr.	No.	Price
Fireplace grill 24/30, for smaller fireplaces and HKD 2.2	N006092		274,00

Fireplace grill 42/30

Available variants

Variant	Art.-Nr.	No.	Price
Fireplace grill 42/30, for bigger fireplaces	N006090		339,50

MAS

MAS Modular Accumulators - MAS 360 vertical

Set consists of:	Art.-Nr.	No.	Price
MAS 360 Accumulation stone		6	
Top cover, vertical MAS 360		1	

Additional options			
Reduction for missing cast iron dome when MAS is being used (in case of devices listed below)	D003362		-87,50
MAS 360 storage stone with bore for thermocouple (1 piece necessary for EAS/EOS devices)	10047		229,00
Cleaning brush MAS 110 mm	902248		56,00

Available variants:

MAS 360 suitable for:			
HKD 2.2 flat short HKD 2.2 round short HKD 2.6 short	SET211441		**1603,50**

MAS Modular Accumulators - MAS 360 horizontal

Set consists of:	Art.-Nr.	No.	Price
MAS 360 Accumulation stone		5	
Top cover, horizontal MAS 360		1	

Additional options			
Reduction for missing cast iron dome when MAS is being used (in case of devices listed below)	D003362		-87,50
MAS 360 storage stone with bore for thermocouple (1 piece necessary for EAS/EOS devices)	10047		229,00
Cleaning brush MAS 110 mm	902248		56,00

Available variants:

MAS 360 suitable for:			
HKD 2.2 flat short HKD 2.2 round short HKD 2.6 short	SET211442		**1602,50**

MAS modular top-mount storage SET 440

Set consists of:	Art.-Nr.	No.	Price
MAS 440 Accumulation stone double-layered		5	
Cast iron dome MAS ⌀ 180		1	
Mounting ring		1	

Additional options			
Exchange connectiong piece ⌀ 200 mm	R009105		84,00
Exchange connectiong piece ⌀ 160 mm	07137		84,00
Cleaning brush MAS 110 mm	902248		56,00

Available variants:

MAS 440 suitable for:			
HKD 2.2 flat HKD 2.2 round HKD 5.1 BKH 5.0 Flach/Tunnel 42-50 BKH 5.0 Flach/Tunnel 42-66 BKH 5.0 Flach/Tunnel 50-98 Stil-Kamin 62/76 Stil-Kamin 75/90 Stil-Kamin 53/88 Eck-Kamin 42/42/42 Eck-Kamin D/S 51/52/52 Eck-Kamin D/S 57/52/52 Eck-Kamin S 57/67/44 Eck-Kamin S 45/67/44 Eck-Kamin S 57//82/48 Eck-Kamin S 45/82/48	SET211444		**2422,00**

MAS modular top-mount storage SET 440

Set consists of:	Art.-Nr.	No.	Price
MAS 440 Accumulation stone double-layered		5	
Cast iron dome MAS ⌀ 180		1	
Mounting ring		1	

Additional options			
Reduction for missing cast iron dome when MAS is being used (in case of devices listed below)	08287		-87,50
Exchange connectiong piece ⌀ 200 mm	R009105		84,00
Exchange connectiong piece ⌀ 160 mm	07137		84,00
Cleaning brush MAS 110 mm	902248		56,00

Available variants:

MAS 440 suitable for:			
HKD 6.1 HKD 2.2 round short DF 33	SET211446		**2415,50**

MAS modular top-mount storage SET 440

Set consists of:	Art.-Nr.	No.	Price
MAS 440 Accumulation stone double-layered		7	
Cast iron dome MAS ⌀ 180		1	
Mounting ring		1	

Additional options			
Exchange connectiong piece ⌀ 200 mm	R009105		84,00
Exchange connectiong piece ⌀ 160 mm	07137		84,00
Cleaning brush MAS 110 mm	902248		56,00

Available variants:

MAS 440 suitable for:			
HKD 7, HKD 8, HKD 11	SET212772		**3045,50**

MAS modular top-mount storage SET 440

Set consists of:	Art.-Nr.	No.	Price
MAS 440 Accumulation stone double-layered		3	
Cast iron dome MAS ⌀ 200		1	
Mounting ring		1	

Additional options			
Cleaning brush MAS 110 mm	902248		56,00

Available variants:

MAS 440 suitable for:			
Panorama-Kamin 51/50/50/50	SET213097		**1792,00**

MSS

Art.-Nr.	Identification of parts	Designation	Price
MSS double-layered			
R013066	1	MSS heat storage module with lining 10 cm, double-layered	156,00
R013065	2	MSS heat storage module with lining 20 cm, double-layered	224,00
R013063	3	MSS T-piece with lining, double-layered	338,50
R013061	4	MSS elbow 90° with lining, double-layered	269,00
R013126	5	MSS inlet block ø 180, double-layered	217,00
R013020	6	MSS steel tape ring, packaging steel tape 16 x 0,5	6,50
R013020-25	6	MSS steel tape ring set 25 pcs. in box	143,00
R013169	7	MSS 3-way elbow 90° ⌀180, double-layer	457,00
900133		MSS glue Thermofix 1000 1 kg	16,00
900133K		MSS glue in box with 16 pcs. / 1 kg each	261,50

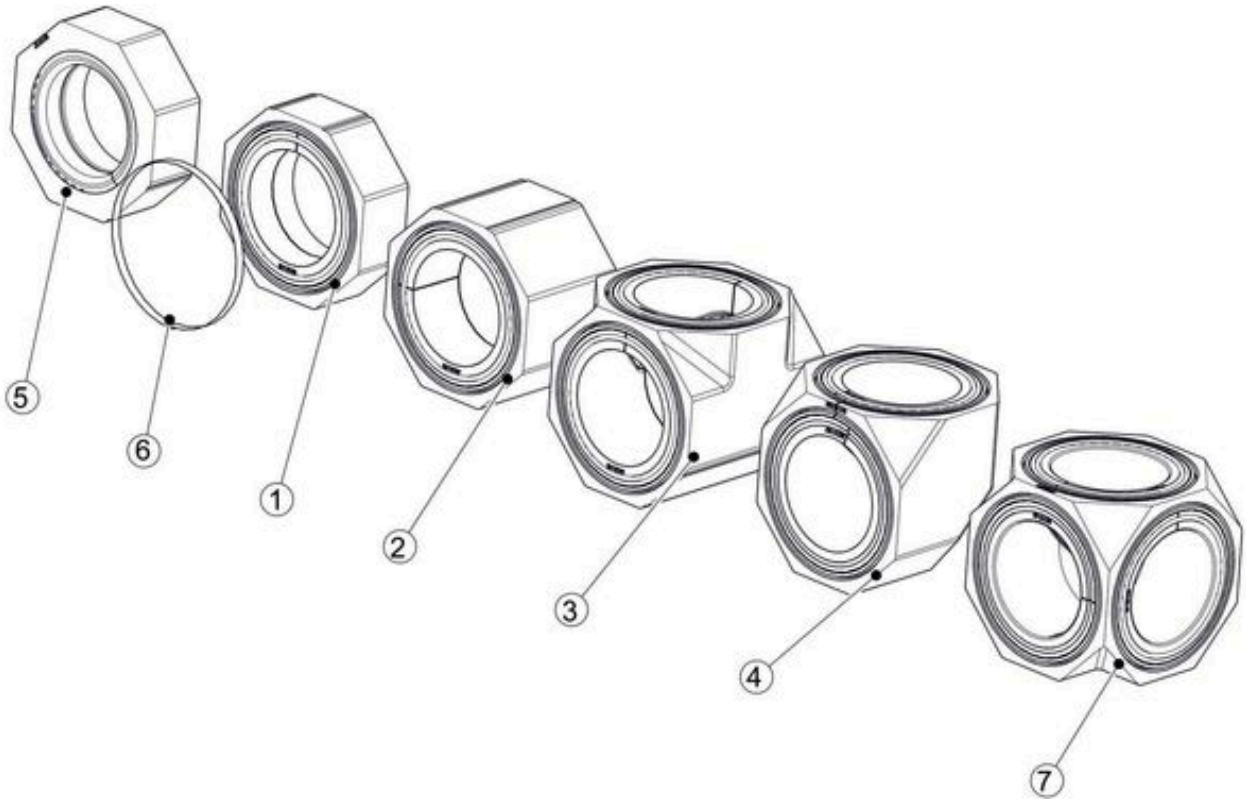

Art.-Nr.	Identification of parts	Designation	Price
MSS single-layered			
R013002	1	MSS heat storage module 10 cm	67,50
R013001	2	MSS heat storage module 20 cm	119,50
R013004	3	MSS T-piece 90°	156,50
R013165	22	MSS elbow 45° single-layer	169,00
R013005	4	MSS elbow 90°	169,00
R013017	5	MSS elbow 90° with cleanout right	217,00
R013018	6	MSS elbow 90° with cleanout left	217,00
R013019	7	MSS elbow 90° with cleanout top	217,00
R013068	8	MSS outlet block ø 160 with sealing	64,50
R013067	9	MSS outlet block ø 180 with sealing	64,50
R013109	11	MSS heat storage module 10 cm with damper flap	424,00
R013016	13	MSS heat storage module 20 cm with cleanout	152,50
R013079	18	MSS cleanout cover with sealing	42,00
R013020	19	MSS steel tape ring, packaging steel tape 16 x 0,5	6,50
R013020-25	19	MSS steel tape ring set 25 pcs. in box	143,00
900133		MSS glue Thermofix 1000 1 kg	16,00
900133K		MSS glue in box with 16 pcs. / 1 kg each	261,50

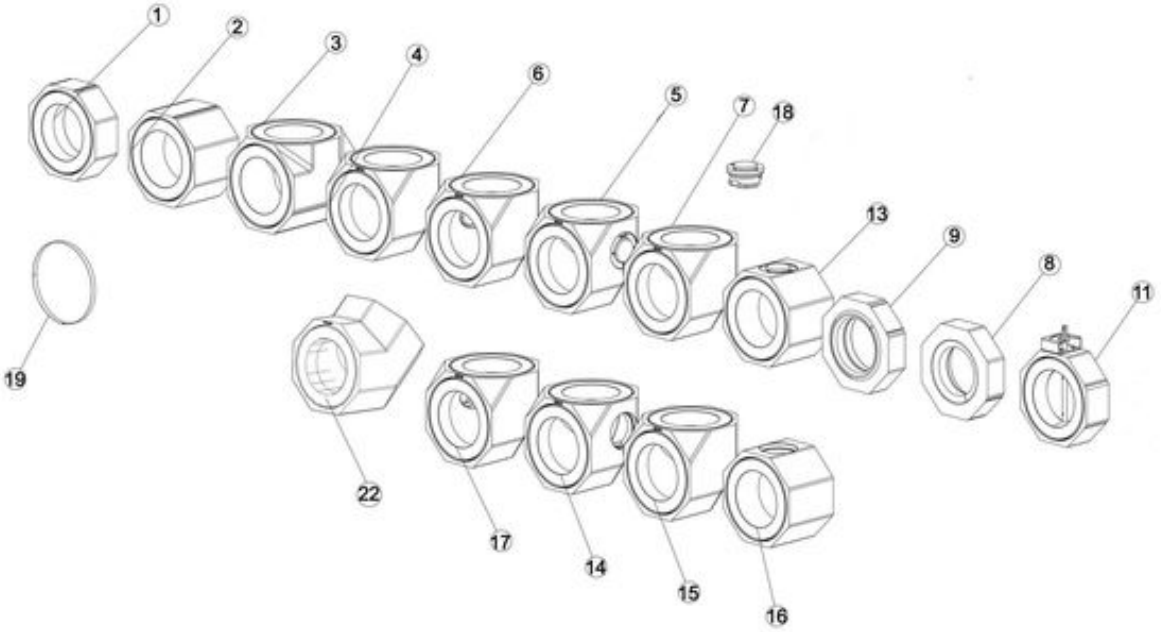

MSS Bypass

If you need to create a bypass, you can set together two MSS with cleanouts, but without using a cleanout cover. In the cleaning openings a bypss has to be inserted. (see MSS assembly instructions)

Art.-Nr.	Identification of parts	Designation	Price
MSS double-layered			
R013073	10	MSS bypass 30 with sealings	49,50
R013074	12	MSS bypass 40 with sealings	49,50
R013009	17	MSS elbow 90° with opening left	175,50
R013006	14	MSS elbow 90° with opening right	175,50
R013007	15	MSS elbow 90° with opening top	175,50
R013003	16	MSS heat storage module 20 cm with opening	140,50

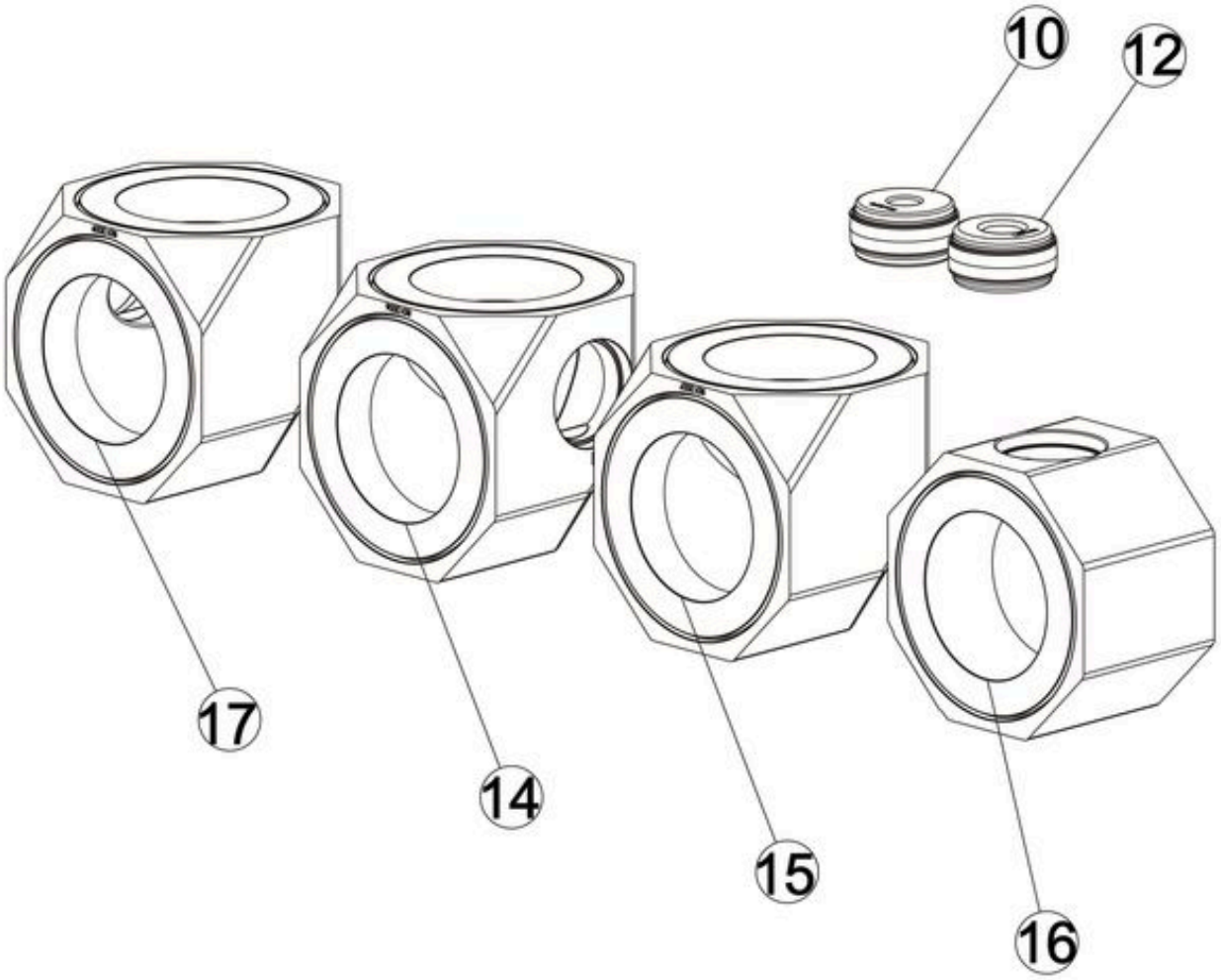

MSS

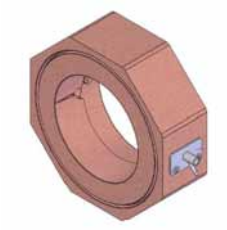

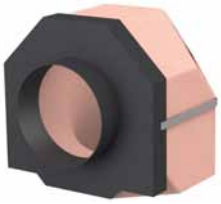

MSS with connection for thermocouple and negative pressure hose

	Art.-Nr.	Price
MSS heat storage module 10 cm with connecting plate for T1, T3 USA (for temperature and negative pressure)	R013133	208,00
MSS inlet adapter for MSS elbow 90 °	R013138	349,50
MSS outlet adapter for MSS Bogen 90 °	R013145	243,00

Art.-Nr.	Identification of parts	Designation	Price
MSS double-layered			
R013108	1	MSSI insulating block 30 x 30 cm	51,50
R013107	2	MSSI insulating block 20 x 30 cm	42,00
R013123	3	MSS base plate 75 30 x 30 cm	51,50
R013124	4	MSS base plate 100 30 x 30 cm	54,50

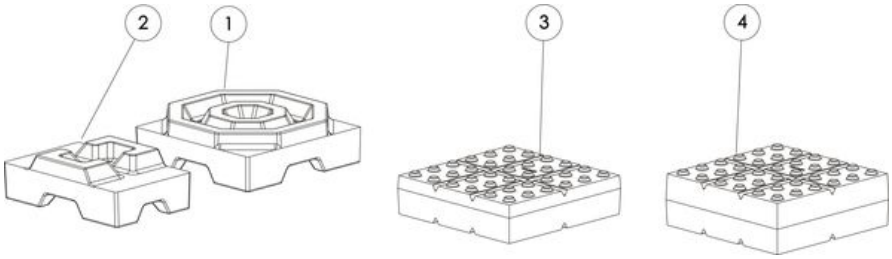

Accessories

	Art.-Nr.	Price
MSS handle with rotating part	R013170	67,50

MSS Pallets

Art.-Nr.	Pcs./Pallet	Designation	Price
R013018P	16	MSS elbow 90° with cleanout left	3117,50
R013019P	16	MSS elbow 90° with cleanout top	3117,50
R013017P	16	MSS elbow 90° with cleanout right	3117,50
R013005P	16	MSS elbow 90°	2436,50
R013165P	12	MSS elbow 45°	1888,00
R013001P	16	MSS heat storage module 20 cm	1718,50
R013002P	32	MSS heat storage module 10 cm	1943,50
R013061P	16	MSS elbow 90° with lining, double-layered	3876,50
R013004P	16	MSS T-piece 90°	2275,00
R013063P	16	MSS T-piece with lining, double-layered	4875,00
R013067P	16	MSS outlet block ø 180 with sealing	921,50
R013066P	32	MSS heat storage module with lining 10 cm, double-layered	4522,00
R013065P	32	MSS heat storage module with lining 20 cm, double-layered	6469,00
R013126P	40	MSS inlet block ø 180, double-layered	7794,50
R013108P	32	MSSI insulating block 30 x 30 cm	1464,50
R013107P	48	MSSI insulating block 20 x 30 cm	1818,50
R013123P	40	MSS base plate 75, 30 x 30 cm	1830,00
R013124P	32	MSS base plate 100, 30 x 30 cm	1714,00

HKD

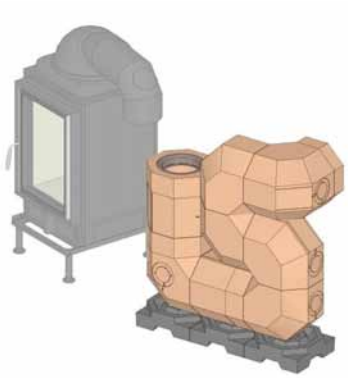

SET213010

MSS heat storage set standing next for HKD stoves 296 kg

Set consists of:	Art.-Nr.	No.	Price
MSS accumulation stone 10 cm	R013002	2	
MSS accumulation stone 20 cm	R013001	2	
MSS elbow 90° with cleanout left	R013018	1	
MSSI insulating block 30x30 cm	R013108	3	
MSS elbow 90°	R013005	1	
MSS elbow 90° with cleanout top	R013019	3	
MSS elbow 90° with opening top	R013007	1	
MSS inlet block ø 180, double-layered	R013126	1	
MSS outlet block ø 160 with sealing	R013068	1	
MSS heat storage module 20 cm with opening	R013003	1	
MSS steel tape ring	R013020	12	
MSS bypass 30 with sealings	R013073	1	
MSS glue Thermofix 1000 1 kg	900133	2	
MSS handle with rotating part	R013170	1	

Available variants:

MSS heat storage set standing next suitable for:			
HKD 7, 8 HKD 11 HKD 4.1, 5.1, 6.1 HKD 2.2, HKD 2.2 XL	SET213010		**2389,00**

Additional options			
SET socket stones	SET213014		317,50

MSS heat storage set standing next for HKD stoves 426 kg

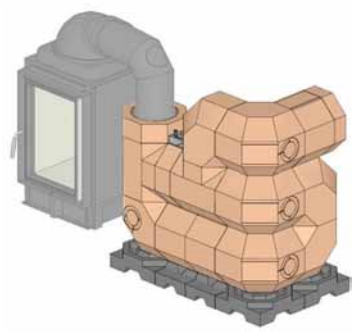

SET213011

Set consists of:	Art.-Nr.	No.	Price
MSS inlet block ø 180, double-layered	R013126	1	
MSS heat storage module 10 cm with damper flap	R013109	1	
MSS outlet block ø 160 with sealing	R013068	1	
MSS T-piece 90°	R013004	2	
MSS elbow 90°	R013005	4	
MSS elbow 90° with cleanout top	R013019	3	
MSS heat storage module 10 cm	R013002	1	
MSS heat storage module 20 cm	R013001	3	
MSS elbow 90° with cleanout left	R013018	1	
MSS steel tape ring	R013020	17	
MSS glue Thermofix 1000 1 kg	900133	3	
MSSI insulating block 30x30 cm	R013108	3	
MSSI insulating block 20x30 cm	R013107	2	
MSS handle with rotating part	R013170	1	
Stainless steel handle for damper flaps / flue gas flaps	10275	1	

Available variants:

MSS heat storage set standing next suitable for:			
HKD 7, 8 HKD 11 HKD 4.1, 5.1, 6.1 HKD 2.2, HKD 2.2 XL	SET213011		**3662,50**

Additional options			
SET socket stones	SET213015		272,00

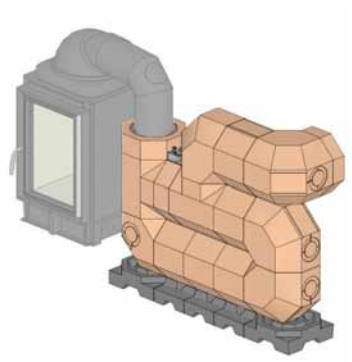

SET213012

MSS heat storage set standing next for HKD stoves 395 kg

Set consists of:	Art.-Nr.	No.	Price
MSS inlet block ø 180, double-layered	R013126	1	
MSS accumulation stone 10 cm	R013109	1	
MSS outlet block ø 160 with sealing	R013068	1	
MSS T-piece 90°	R013004	2	
MSS heat storage module 20 cm	R013001	6	
MSS elbow 90° with cleanout top	R013019	3	
MSS heat storage module 10 cm	R013002	1	
MSS elbow 90°	R013005	1	
MSS elbow 90° with cleanout left	R013018	1	
MSS handle with rotating part	R013170	1	
MSS steel tape ring	R013020	17	
MSS glue Thermofix 1000 1 kg	900133	3	
MSSI insulating block 30x30 cm	R013108	2	
MSSI insulating block 20x30 cm	R013107	3	
Stainless steel handle for damper flaps / flue gas flaps	10275	1	

Available variants:

MSS heat storage set standing next suitable for:			
HKD 7, 8 HKD 11 HKD 4.1, 5.1, 6.1 HKD 2.2, HKD 2.2 XL	SET213012		**3505,50**

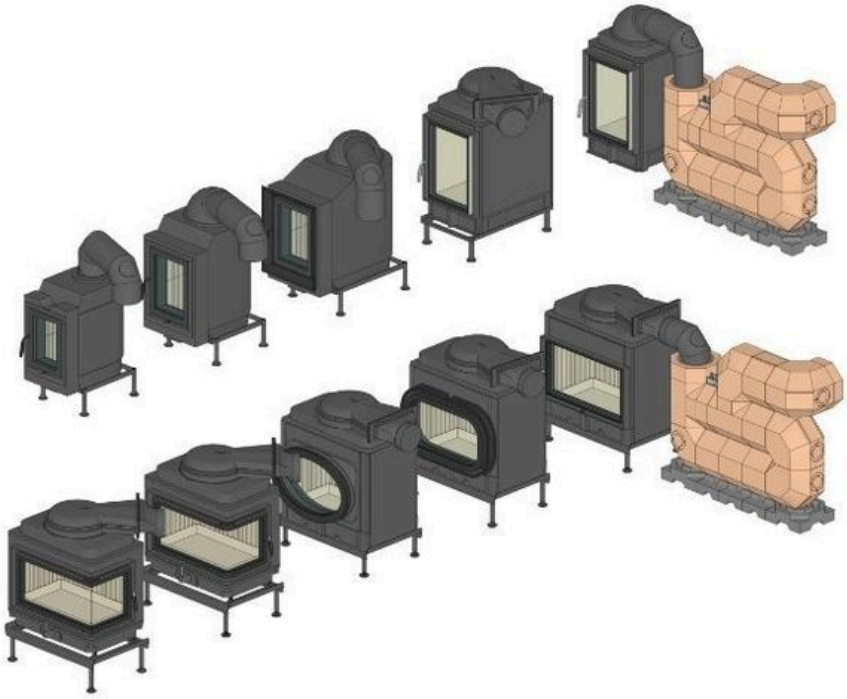

MSS heat storage set standing next for HKD stoves 211,5 kg

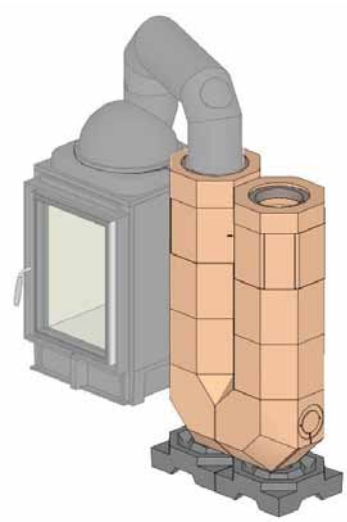

SET213013

Set consists of:	Art.-Nr.	No.	Price
MSS inlet block ø 180, double-layered	R013126	1	
MSS outlet block ø 160 with sealing	R013068	1	
MSS elbow 90°	R013005	1	
MSS heat storage module 20 cm	R013001	4	
MSS elbow 90° with cleanout top	R013019	1	
MSS heat storage module 20 cm with opening	R013003	2	
MSS bypass 30 with sealings	R013073	1	
MSS steel tape ring	R013020	9	
MSS glue Thermofix 1000 1 kg	900133	2	
MSSI insulating block 30x30 cm	R013108	2	
MSS handle with rotating part	R013170	1	

Available variants:

MSS heat storage set standing next suitable for:			
HKD 6.1 HKD 7, 8 HKD 11 HKD 4.1, 5.1 HKD 2.2	SET213013		**1737,00**

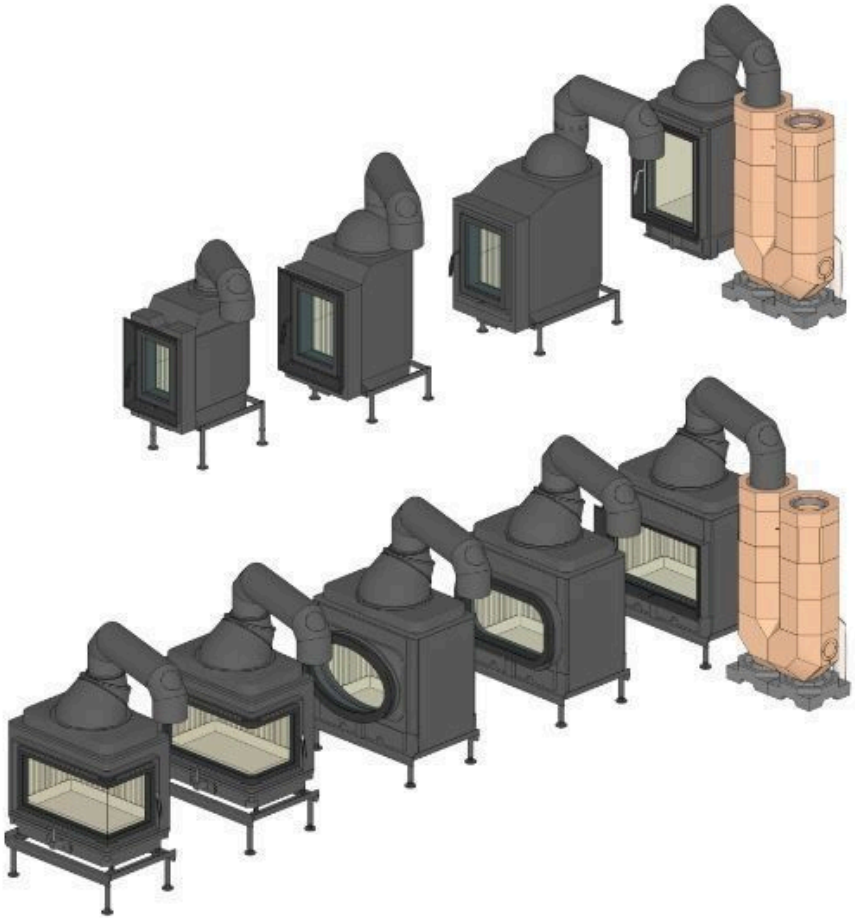

flat

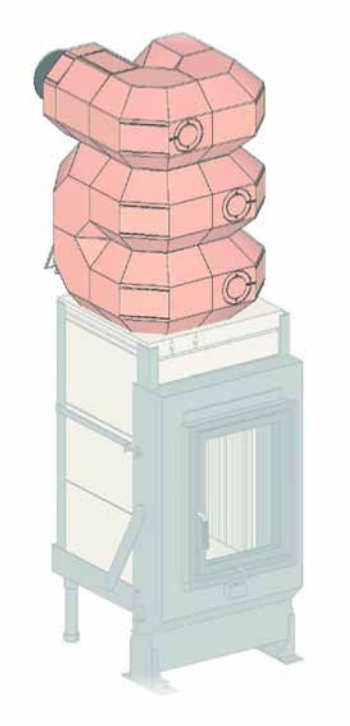

MSS heat storage set standing on top 400 kg

Set consists of:	Art.-Nr.	No.	Price
Accumulation stone MSS connecting block / GOF top cover	G013196	1	
MSS elbow 90° with lining, double-layered	R013061	1	
MSS elbow 90° with cleanout top	R013019	3	
MSS outlet block ø 180 with sealing	R013067	1	
MSS heat storage module 20 cm	R013001	1	
MSS elbow 90°	R013005	6	
MSS steel tape ring, packaging steel tape 16 x 0,5	R013020	13	
MSS glue Thermofix 1000 1 kg	900133	2	
MSS elbow 90° with cleanout left	R013018	1	
MSS handle with rotating part	R013170	1	

Available variants:

MSS heat storage set standing on top suitable for:			
GOF 37x42 + GOT 52/37-ZL side-opening door	SET211451		**2747,00**

With the MSS set a flue outlet can be realized either to the left or right side.

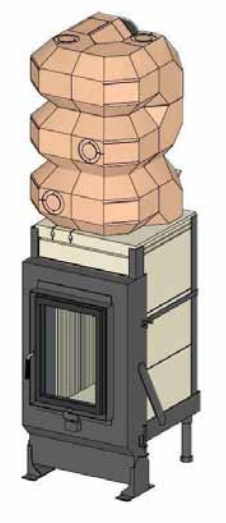

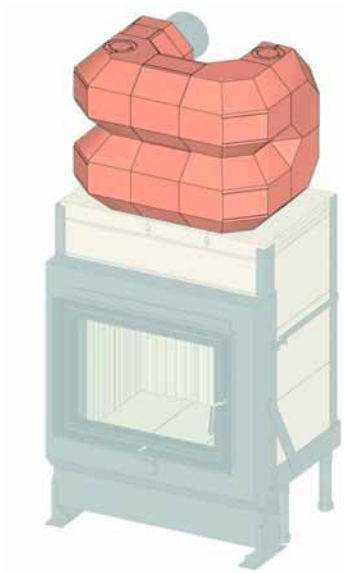

MSS heat storage set standing on top 300 kg

Set consists of:	Art.-Nr.	No.	Price
Accumulation stone MSS connecting block / GOF top cover	G013196	1	
MSS elbow 90° with lining, double-layered	R013061	1	
MSS elbow 90° with cleanout top	R013019	1	
MSS outlet block ø 180 with sealing	R013067	1	
MSS heat storage module 10 cm	R013002	1	
MSS elbow 90°	R013005	4	
MSS elbow 90° with cleanout left	R013018	1	
MSS steel tape ring, packaging steel tape 16 x 0,5	R013020	11	
MSS glue Thermofix 1000 1 kg	900133	2	
MSS heat storage module 20 cm	R013001	2	
MSS handle with rotating part	R013170	1	

Available variants:

MSS heat storage set standing on top suitable for:			
GOF 66x42 + GOT 51/67-ZL side-opening door	SET211412		**2149,50**

With the MSS set a flue outlet can be realized either to the left or right side.

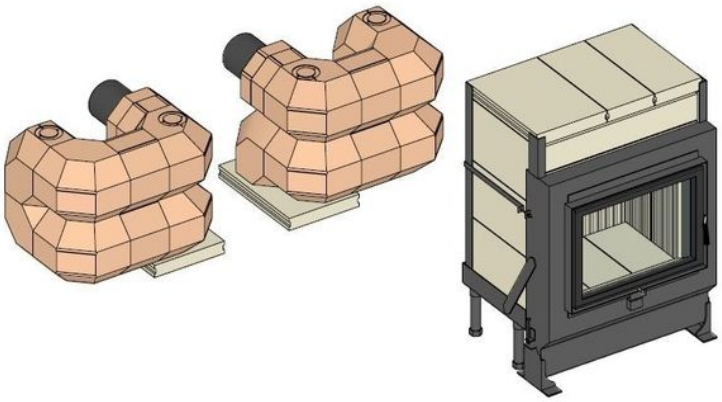

MSS heat storage set standing on top 270 kg

Set consists of:	Art.-Nr.	No.	Price
Accumulation stone MSS connecting block / GOF top cover	G013196	1	
MSS elbow 90° with lining, double-layered	R013061	1	
MSS elbow 90° with cleanout top	R013019	2	
MSS outlet block ø 180 with sealing	R013067	1	
MSS heat storage module 20 cm	R013001	1	
MSS elbow 90°	R013005	3	
MSS steel tape ring, packaging steel tape 16 x 0,5	R013020	9	
MSS glue Thermofix 1000 1 kg	900133	1	
MSS elbow 90° with cleanout right	R013017	1	
MSS handle with rotating part	R013170	1	

Available variants:

MSS heat storage set standing on top suitable for:			
GOF 37x37 + GOT HKD 6.1 GOF 37x37 + GOT HKD 5.1/12	SET211453		**1981,50**

With the MSS set a flue outlet can be realized either to the left or right side.

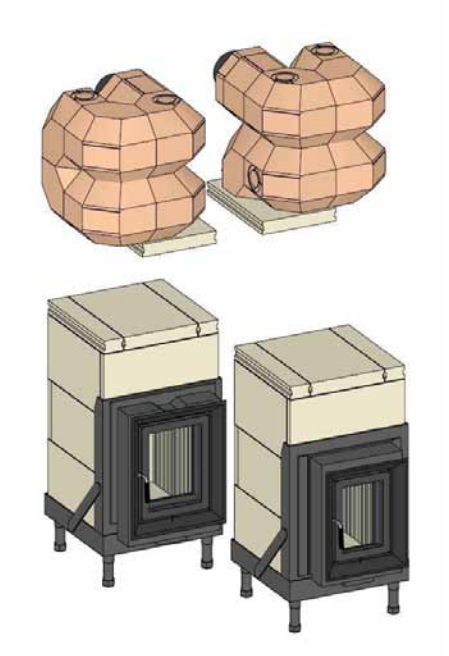

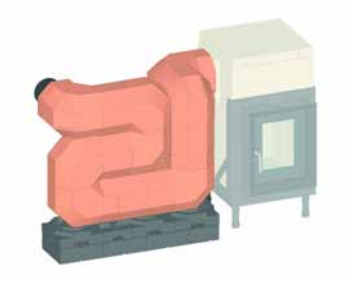

MSS heat storage set standing next 410 kg

Set consists of:	Art.-Nr.	No.	Price
Accumulation stone MSS connecting block / GOF side	G015107	1	
MSS elbow 90° with lining, double-layered	R013061	1	
MSS outlet block ø 180 with sealing	R013067	1	
MSS heat storage module 10 cm	R013002	2	
MSS elbow 90°	R013005	3	
MSS steel tape ring, packaging steel tape 16 x 0,5	R013020	18	
MSS glue Thermofix 1000 1 kg	900133	2	
MSS heat storage module 20 cm	R013001	5	
MSSI insulating block 30x30 cm	R013108	3	
MSSI insulating block 20x30 cm	R013107	1	
MSS elbow 90° with opening left	R013009	1	
MSS elbow 90° with opening top	R013007	1	
MSS bypass 30 with sealings	R013073	1	
MSS heat storage module with lining 10 cm, double-layered	R013066	1	
MSS base plate 100 30x30 cm	R013124	4	
MSS elbow 90° with cleanout top	R013019	2	
MSS handle with rotating part	R013170	1	

Available variants:

MSS heat storage set standing on top suitable for:			
GOF 37x37 + GOT HKD 6.1 GOF 37x37 + GOT HKD 5.1/12	SET211457		**3373,50**

The MSS accumulation block can be mounted either to the left or right side of the GOF

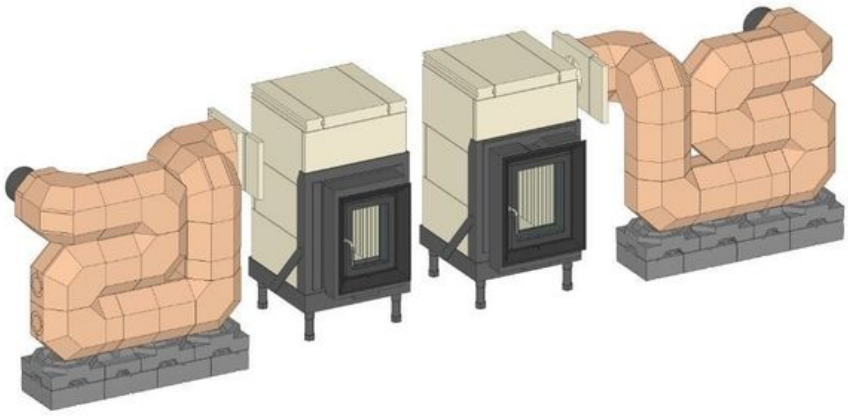

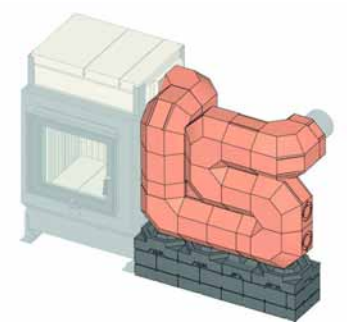

MSS heat storage set standing next 410 kg

Set consists of:	Art.-Nr.	No.	Price
Accumulation stone MSS connecting block / GOF side	G015107	1	
MSS elbow 90° with lining, double-layered	R013061	1	
MSS elbow 90° with cleanout top	R013019	2	
MSS outlet block ø 180 with sealing	R013067	1	
MSS heat storage module 10 cm	R013002	2	
MSS elbow 90°	R013005	3	
MSS steel tape ring, packaging steel tape 16 x 0,5	R013020	18	
MSS glue Thermofix 1000 1 kg	900133	3	
MSS heat storage module 20 cm	R013001	5	
MSSI insulating block 30x30 cm	R013108	3	
MSSI insulating block 20x30 cm	R013107	1	
MSS elbow 90° with opening left	R013009	1	
MSS elbow 90° with opening top	R013007	1	
MSS bypass 30 with sealings	R013073	1	
MSS heat storage module with lining 10 cm, double-layered	R013066	1	
MSS base plate 75 30x30 cm	R013123	4	
MSS base plate 100 30x30 cm	R013124	4	
MSS handle with rotating part	R013170	1	

Available variants:

MSS heat storage set standing next suitable for:			
GOF 37x42 + GOT 52/37-ZL side-opening door GOF 55x42 + GOT 51/67-ZL side-opening door	SET211417		**3595,50**

The MSS accumulation block can be mounted either to the left or right side of the GOF

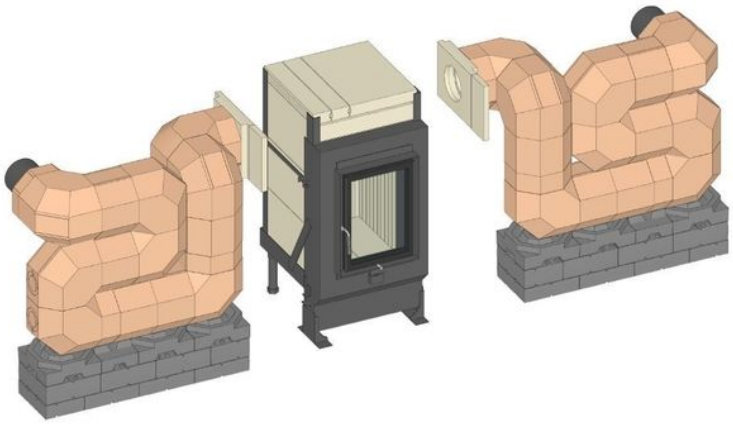

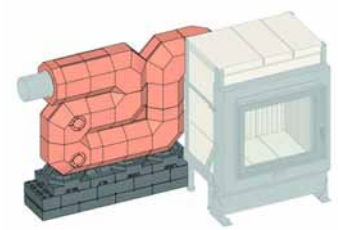

MSS heat storage set standing next (bank) 390 kg

Set consists of:	Art.-Nr.	No.	Price
Accumulation stone MSS connecting block / GOF side	G015107	1	
MSS elbow 90° with lining, double-layered	R013061	1	
MSS outlet block ø 180 with sealing	R013067	1	
MSS heat storage module 10 cm	R013002	2	
MSS elbow 90°	R013005	2	
MSS steel tape ring, packaging steel tape 16 x 0,5	R013020	17	
MSS glue Thermofix 1000 1 kg	900133	3	
MSS heat storage module 20 cm	R013001	6	
MSSI insulating block 30x30 cm	R013108	3	
MSSI insulating block 20x30 cm	R013107	1	
MSS elbow 90° with opening top	R013007	2	
MSS bypass 30 with sealings	R013073	1	
MSS base plate 75 30x30 cm	R013123	4	
MSS base plate 100 30x30 cm	R013124	4	
MSS elbow 90° with cleanout right	R013017	2	
MSS handle with rotating part	R013170	1	

Available variants:

MSS heat storage set standing next suitable for:			
GOF 37x42 + GOT 52/37-ZL side-opening door GOF 66x42 + GOT 51/67-ZL side-opening door	SET211418		**3383,50**

The MSS accumulation block can be mounted either to the left or right side of the GOF

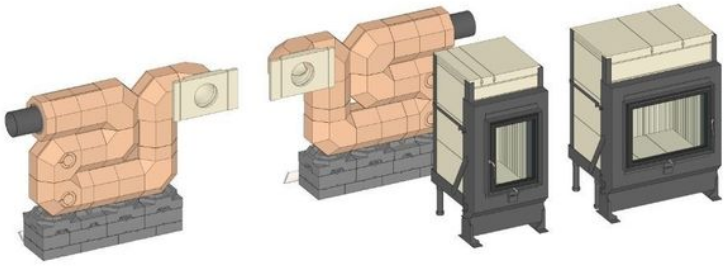

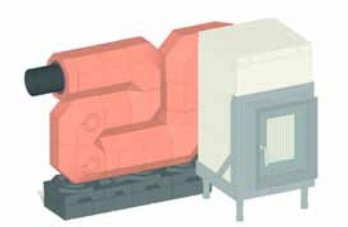

MSS heat storage set standing next (bank) 390 kg

Set consists of:	Art.-Nr.	No.	Price
Accumulation stone MSS connecting block / GOF side	G015107	1	
MSS elbow 90° with lining, double-layered	R013061	1	
MSS outlet block ø 180 with sealing	R013067	1	
MSS heat storage module 10 cm	R013002	2	
MSS elbow 90°	R013005	2	
MSS steel tape ring, packaging steel tape 16 x 0,5	R013020	17	
MSS glue Thermofix 1000 1 kg	900133	3	
MSS heat storage module 20 cm	R013001	6	
MSSI insulating block 30x30 cm	R013108	3	
MSSI insulating block 20x30 cm	R013107	1	
MSS elbow 90° with opening top	R013007	2	
MSS bypass 30 with sealings	R013073	1	
MSS base plate 100 30x30 cm	R013124	4	
MSS elbow 90° with cleanout right	R013017	2	
MSS handle with rotating part	R013170	1	

Available variants:

MSS heat storage set standing next suitable for:			
GOF 37x37+ GOT HKD 5.1/12 GOF 37x37 + GOT HKD 6.1	SET211459		**3177,50**

The MSS accumulation block can be mounted either to the left or right side of the GOF

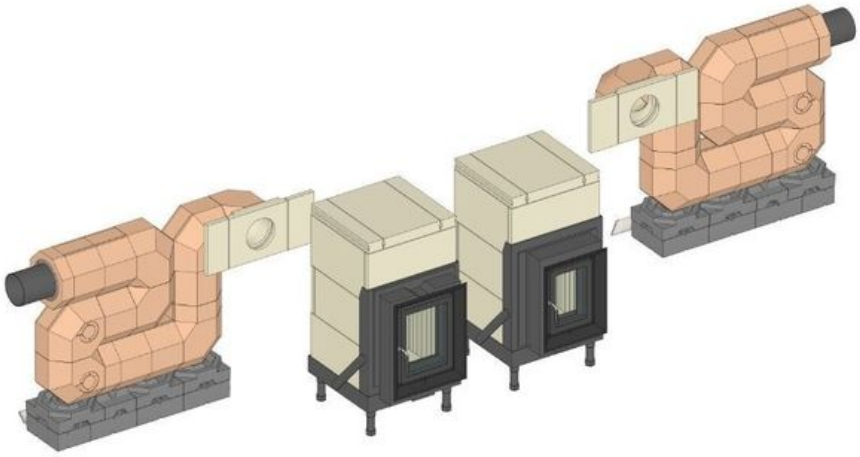

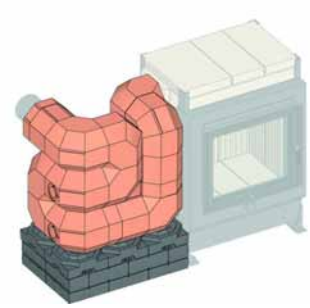

MSS heat storage set standing next 430 kg

Set consists of:	Art.-Nr.	No.	Price
Accumulation stone MSS connecting block / GOF side	G015107	1	
MSS elbow 90° with lining, double-layered	R013061	1	
MSS elbow 90° with cleanout top	R013019	2	
MSS outlet block ø 180 with sealing	R013067	1	
MSS heat storage module 10 cm	R013002	2	
MSS elbow 90°	R013005	5	
MSS steel tape ring, packaging steel tape 16 x 0,5	R013020	17	
MSS glue Thermofix 1000 1 kg	900133	3	
MSS heat storage module 20 cm	R013001	3	
MSSI insulating block 30x30 cm	R013108	4	
MSS elbow 90° with opening left	R013009	1	
MSS elbow 90° with opening top	R013007	1	
MSS bypass 30 with sealings	R013073	1	
MSS heat storage module with lining 10 cm, double-layered	R013066	1	
MSS base plate 75 30x30 cm	R013123	4	
MSS base plate 100 30x30 cm	R013124	4	
MSS handle with rotating part	R013170	1	

Available variants:

MSS heat storage set standing next suitable for:			
GOF 37x42 + GOT 52/37-ZL side-opening door GOF 66x42 + GOT 51/67-ZL side-opening door	SET211420		**3697,00**

The MSS accumulation block can be mounted either to the left or right side of the GOF

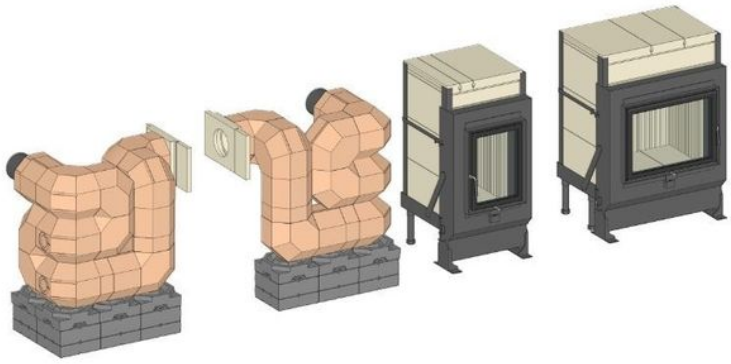

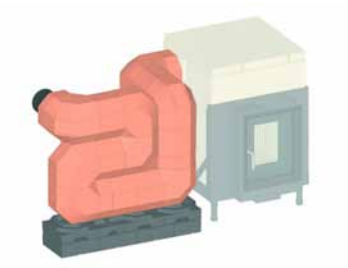

MSS heat storage set standing next 430 kg

Set consists of:	Art.-Nr.	No.	Price
Accumulation stone MSS connecting block / GOF side	G015107	1	
MSS elbow 90° with lining, double-layered	R013061	1	
MSS outlet block ø 180 with sealing	R013067	1	
MSS heat storage module 10 cm	R013002	2	
MSS elbow 90°	R013005	3	
MSS steel tape ring, packaging steel tape 16 x 0,5	R013020	19	
MSS glue Thermofix 1000 1 kg	900133	3	
MSS heat storage module 20 cm	R013001	6	
MSSI insulating block 30x30 cm	R013108	3	
MSSI insulating block 20x30 cm	R013107	1	
MSS elbow 90° with opening left	R013009	1	
MSS elbow 90° with opening top	R013007	1	
MSS bypass 30 with sealings	R013073	1	
MSS heat storage module with lining 10 cm, double-layered	R013066	1	
MSS base plate 100 30x30 cm	R013124	4	
MSS elbow 90° with cleanout top	R013019	2	
MSS handle with rotating part	R013170	1	

Available variants:

MSS heat storage set standing next suitable for:			
GOF 37x37+ GOT HKD 5.1/12 GOF 37x37 + GOT HKD 6.1	SET211458		**3515,50**

The MSS accumulation block can be mounted either to the left or right side of the GOF

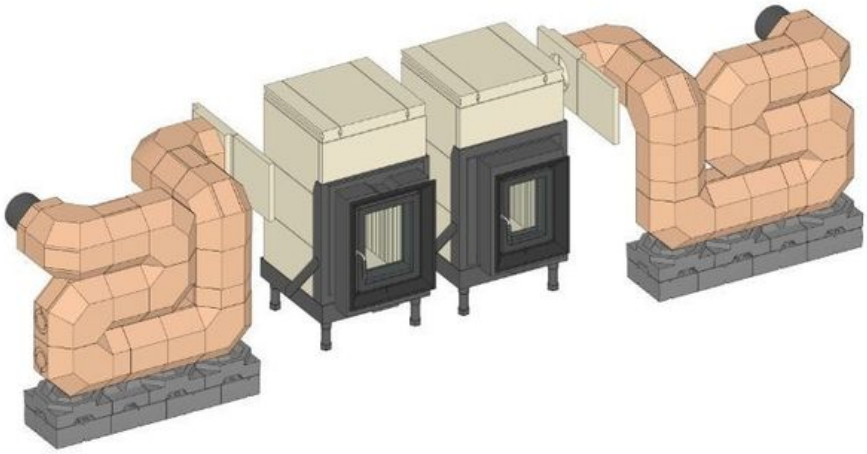

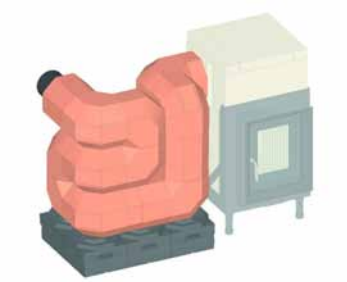

MSS heat storage set standing next 430 kg

Set consists of:	Art.-Nr.	No.	Price
Accumulation stone MSS connecting block / GOF side	G015107	1	
MSS elbow 90° with lining, double-layered	R013061	1	
MSS outlet block ø 180 with sealing	R013067	1	
MSS heat storage module 10 cm	R013002	2	
MSS elbow 90°	R013005	5	
MSS steel tape ring, packaging steel tape 16 x 0,5	R013020	17	
MSS glue Thermofix 1000 1 kg	900133	3	
MSS heat storage module 20 cm	R013001	3	
MSSI insulating block 30x30 cm	R013108	4	
MSS elbow 90° with opening top	R013007	1	
MSS bypass 30 with sealings	R013073	1	
MSS base plate 100 30x30 cm	R013124	4	
MSS heat storage module with lining 10 cm, double-layered	R013066	1	
MSS elbow 90° with cleanout top	R013019	2	
MSS elbow 90° with opening left	R013009	1	
MSS handle with rotating part	R013170	1	

Available variants:

MSS heat storage set standing next suitable for:			
GOF 37x37+ GOT HKD 5.1/12 GOF 37x37 + GOT HKD 6.1	SET211460		**3491,00**

The MSS accumulation block can be mounted either to the left or right side of the GOF

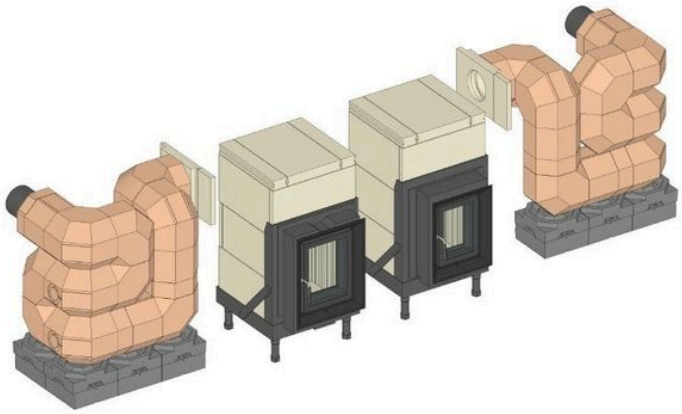

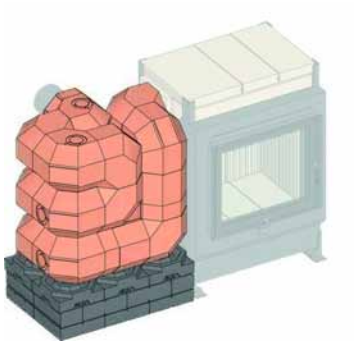

MSS heat storage set standing next 530 kg

Set consists of:	Art.-Nr.	No.	Price
Accumulation stone MSS connecting block / GOF side	G015107	1	
MSS elbow 90° with lining, double-layered	R013061	1	
MSS elbow 90° with cleanout top	R013019	2	
MSS outlet block ø 180 with sealing	R013067	1	
MSS heat storage module 10 cm	R013002	2	
MSS elbow 90°	R013005	7	
MSS steel tape ring, packaging steel tape 16 x 0,5	R013020	21	
MSS glue Thermofix 1000 1 kg	900133	3	
MSS heat storage module 20 cm	R013001	2	
MSSI insulating block 30x30 cm	R013108	6	
MSS elbow 90° with opening left	R013009	1	
MSS elbow 90° with opening top	R013007	1	
MSS bypass 30 with sealings	R013073	1	
MSS heat storage module with lining 10 cm, double-layered	R013066	1	
MSS base plate 75 30x30 cm	R013123	6	
MSS base plate 100 30x30 cm	R013124	6	
MSS elbow 90° with cleanout right	R013017	2	
MSS handle with rotating part	R013170	1	

Available variants:

MSS heat storage set standing next suitable for:			
GOF 37x42 + GOT 52/37-ZL side-opening door GOF 66x42 + GOT 51/67-ZL side-opening door	SET211421		**4689,50**

The MSS accumulation block can be mounted either to the left or right side of the GOF

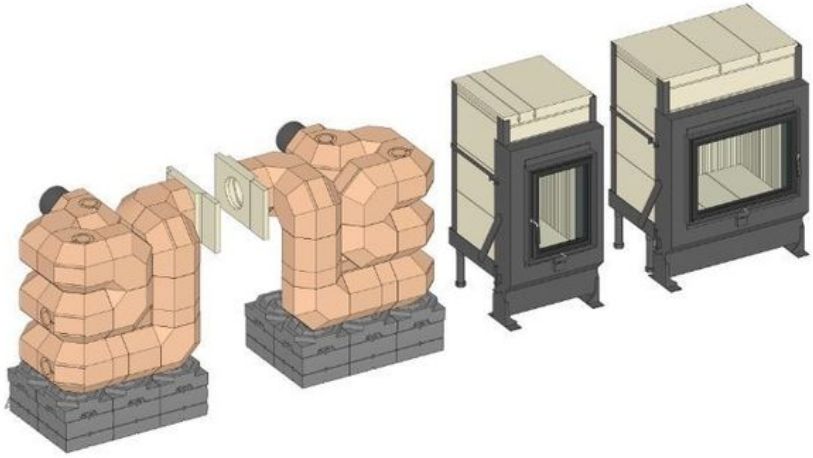

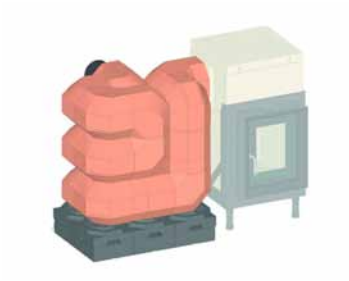

MSS heat storage set standing next 530 kg

Set consists of:	Art.-Nr.	No.	Price
Accumulation stone MSS connecting block / GOF side	G015107	1	
MSS elbow 90° with lining, double-layered	R013061	1	
MSS outlet block ø 180 with sealing	R013067	1	
MSS heat storage module 10 cm	R013002	2	
MSS elbow 90°	R013005	7	
MSS steel tape ring, packaging steel tape 16 x 0,5	R013020	21	
MSS glue Thermofix 1000 1 kg	900133	3	
MSS heat storage module 20 cm	R013001	2	
MSSI insulating block 30x30 cm	R013108	6	
MSS elbow 90° with opening top	R013007	1	
MSS bypass 30 with sealings	R013073	1	
MSS base plate 100 30x30 cm	R013124	6	
MSS heat storage module with lining 10 cm, double-layered	R013066	1	
MSS elbow 90° with cleanout top	R013019	2	
MSS elbow 90° with opening left	R013009	1	
MSS elbow 90° with cleanout right	R013017	2	
MSS handle with rotating part	R013170	1	

Available variants:

MSS heat storage set standing next suitable for:			
GOF 37x37+ GOT HKD 5.1/12 GOF 37x37 + GOT HKD 6.1	SET211462		**4380,50**

The MSS accumulation block can be mounted either to the left or right side of the GOF

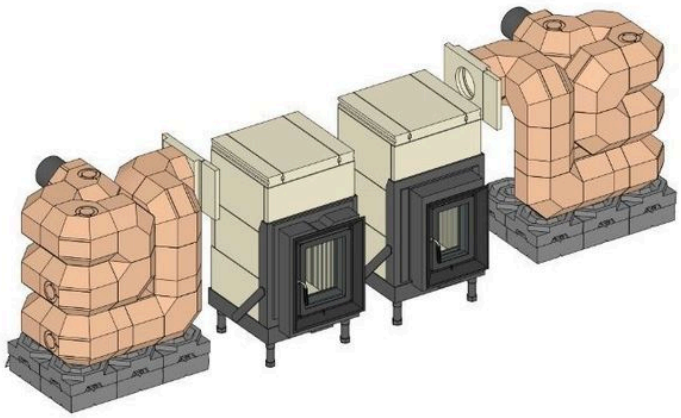

Eck

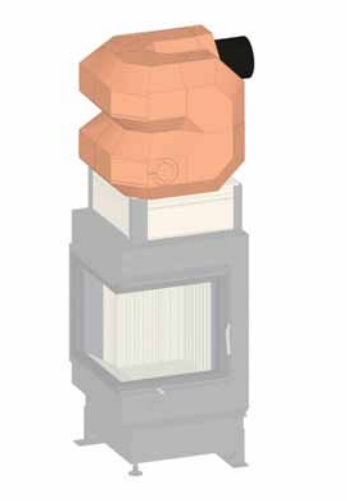

MSS heat storage set standing on top 280 kg

Set consists of:	Art.-Nr.	No.	Price
Accumulation stone MSS connecting block / GOF top cover	G021138	1	
MSS elbow 90° with lining, double-layered	R013061	1	
MSS elbow 90°	R013018	1	
MSS elbow 90°	R013005	3	
MSS outlet block ø 180 with sealing	R013067	1	
MSS steel tape ring, packaging steel tape 16 x 0,5	R013020	9	
MSS glue Thermofix 1000 1 kg	900133	2	
MSS heat storage module 20 cm	R013001	1	
MSS elbow 90°	R013019	2	
MSS handle with rotating part	R013170	1	

Available variants:

MSS heat storage set standing on top suitable for:			
GOF 35x35 + GOT 51/52/52-ZL side-opening door	SET211507		**1978,00**

Note: For top-mount MSS kits in connection with door frame and flush casing, it is necessary to plan a wall thickness of <= 20 mm

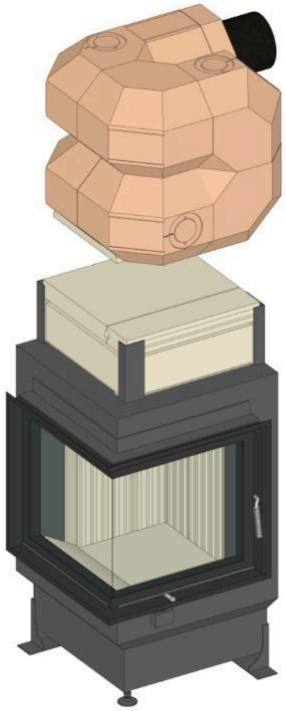

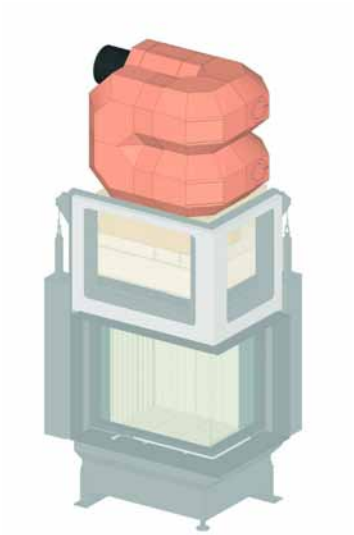

MSS heat storage set standing on top 330 kg

Set consists of:	Art.-Nr.	No.	Price
Accumulation stone MSS connecting block / GOF top cover	G021138	1	
MSS elbow 90° with lining, double-layered	R013061	1	
MSS elbow 90° with cleanout top	R013019	2	
MSS outlet block ø 180 with sealing	R013067	1	
MSS elbow 90°	R013005	3	
MSS steel tape ring, packaging steel tape 16 x 0,5	R013020	14	
MSS glue Thermofix 1000 1 kg	900133	2	
MSS heat storage module 20 cm	R013001	1	
MSS heat storage module with lining 20 cm, double-layered	R013065	1	
MSS heat storage module 10 cm	R013002	4	
MSS elbow 90° with cleanout right	R013017	1	
MSSI insulating block 30x30 cm	R013108	1	
MSSI insulating block 20x30 cm	R013107	2	
MSS base plate 100 30x30 cm	R013124	3	
MSS handle with rotating part	R013170	1	

Available variants:

MSS heat storage set standing on top suitable for:			
GOF 50x35 + GOT 45/67/44-ZL lifting door	SET211455		**2803,00**

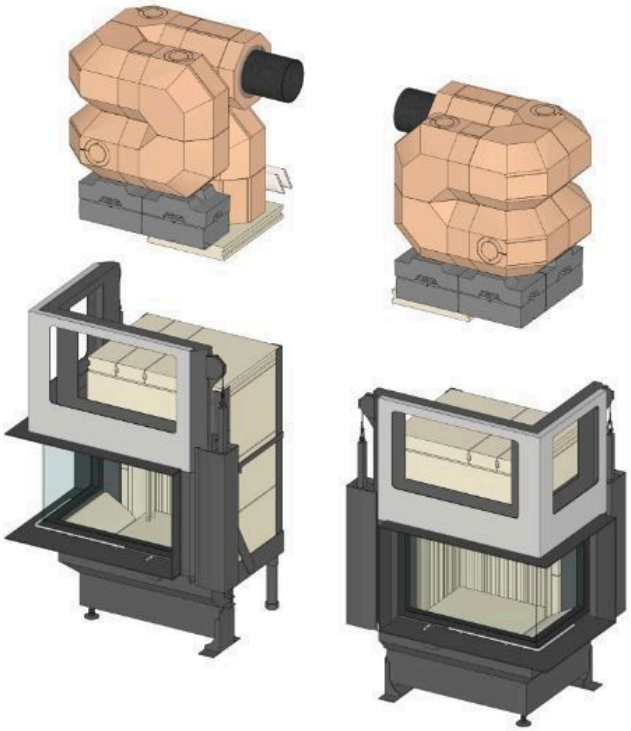

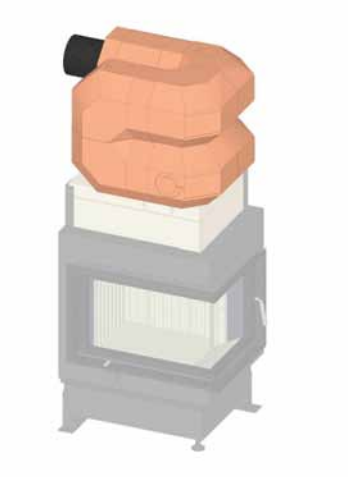

MSS heat storage set standing on top 330 kg

Set consists of:	Art.-Nr.	No.	Price
Accumulation stone MSS connecting block / GOF top cover	G021138	1	
MSS elbow 90° with lining, double-layered	R013061	1	
MSS outlet block ø 180 with sealing	R013067	1	
MSS elbow 90°	R013005	3	
MSS steel tape ring, packaging steel tape 16 x 0,5	R013020	13	
MSS glue Thermofix 1000 1 kg	900133	2	
MSS heat storage module 10 cm	R013002	4	
MSS heat storage module 20 cm	R013001	1	
MSS elbow 90°	R013019	2	
MSS elbow 90°	R013017	1	
MSS handle with rotating part	R013170	1	

Available variants:

MSS heat storage set standing on top suitable for:			
GOF 50x35 + GOT 45/67/44-ZL side-opening door	SET211506		**2273,50**

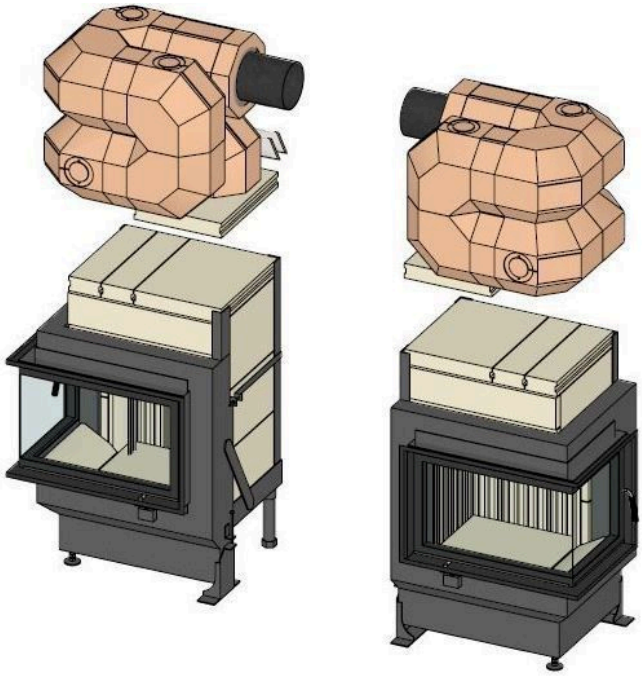

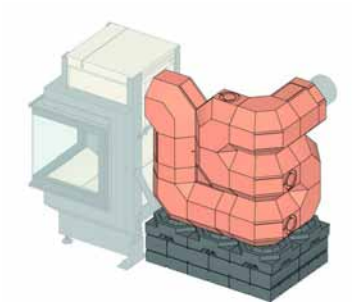

MSS heat storage set standing next at corner right side 390 kg

Set consists of:	Art.-Nr.	No.	Price
Accumulation stone MSS connecting block / GOF side	G023205	1	
MSS elbow 90° with lining, double-layered	R013061	1	
MSS elbow 90° with cleanout top	R013019	3	
MSS outlet block ø 180 with sealing	R013067	1	
MSS heat storage module 10 cm	R013002	2	
MSS elbow 90°	R013005	4	
MSS steel tape ring, packaging steel tape 16 x 0,5	R013020	15	
MSS glue Thermofix 1000 1 kg	900133	2	
MSS heat storage module 20 cm	R013001	2	
MSSI insulating block 30x30 cm	R013108	4	
MSS elbow 90° with opening top	R013007	1	
MSS bypass 30 with sealings	R013073	1	
MSS base plate 75 30x30 cm	R013123	4	
MSS base plate 100 30x30 cm	R013124	4	
MSS heat storage module 20 cm with opening	R013003	1	
MSS handle with rotating part	R013170	1	

Available variants:

MSS heat storage set standing next suitable for:			
GOF 35x35 + GOT 51/52/52-ZL side-opening door	SET211423		**3405,50**

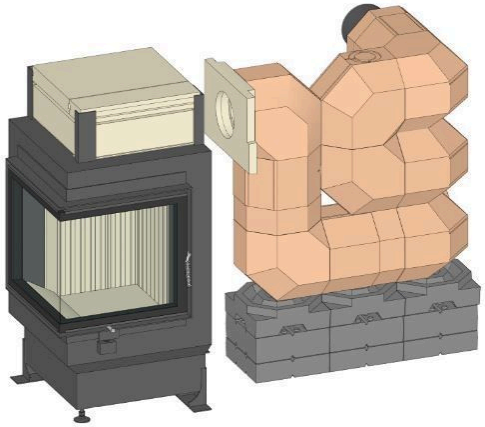

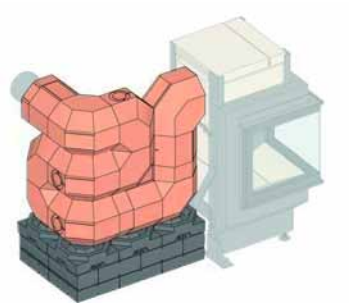

MSS heat storage set standing next at corner left side 390 kg

Set consists of:	Art.-Nr.	No.	Price
Accumulation stone MSS connecting block / GOF side	G023204	1	
MSS elbow 90° with lining, double-layered	R013061	1	
MSS elbow 90° with cleanout top	R013019	3	
MSS outlet block ø 180 with sealing	R013067	1	
MSS heat storage module 10 cm	R013002	2	
MSS elbow 90°	R013005	4	
MSS steel tape ring, packaging steel tape 16 x 0,5	R013020	15	
MSS glue Thermofix 1000 1 kg	900133	2	
MSS heat storage module 20 cm	R013001	2	
MSSI insulating block 30x30 cm	R013108	4	
MSS elbow 90° with opening top	R013007	1	
MSS bypass 30 with sealings	R013073	1	
MSS base plate 75 30x30 cm	R013123	4	
MSS base plate 100 30x30 cm	R013124	4	
MSS heat storage module 20 cm with opening	R013003	1	
MSS handle with rotating part	R013170	1	

Available variants:

MSS heat storage set standing next suitable for:			
GOF 35x35 + GOT 51/52/52-ZL side-opening door	SET211422		**3405,50**

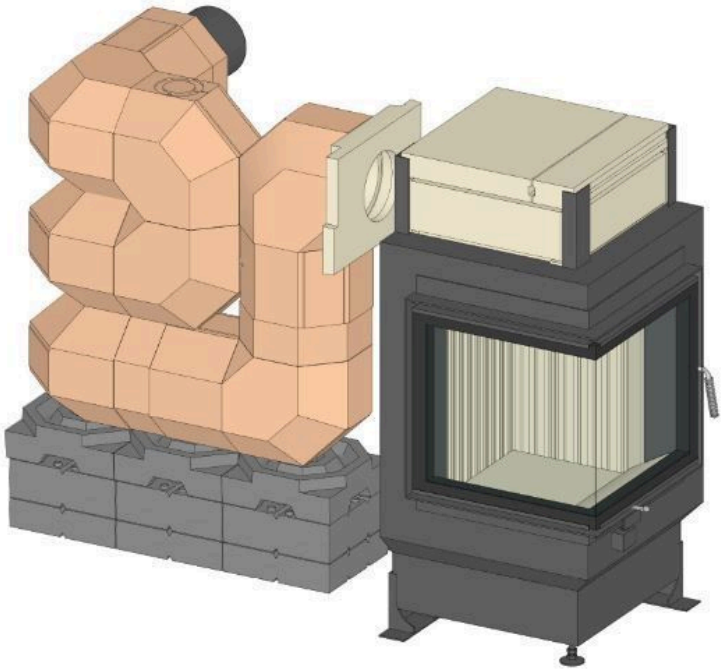

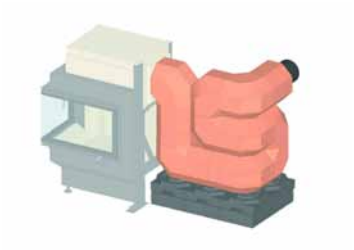

MSS heat storage set standing next at corner right side 390 kg

Set consists of:	Art.-Nr.	No.	Price
Accumulation stone MSS connecting block / GOF side	G023205	1	
MSS elbow 90° with lining, double-layered	R013061	1	
MSS elbow 90° with cleanout top	R013019	3	
MSS outlet block ø 180 with sealing	R013067	1	
MSS heat storage module 10 cm	R013002	2	
MSS elbow 90°	R013005	4	
MSS steel tape ring, packaging steel tape 16 x 0,5	R013020	15	
MSS glue Thermofix 1000 1 kg	900133	2	
MSS heat storage module 20 cm	R013001	2	
MSSI insulating block 30x30 cm	R013108	4	
MSS elbow 90° with opening top	R013007	1	
MSS bypass 30 with sealings	R013073	1	
MSS heat storage module 20 cm with opening	R013003	1	
MSS base plate 100 30x30 cm	R013124	4	
MSS handle with rotating part	R013170	1	

Available variants:

MSS heat storage set standing next suitable for:			
GOF 50x35 + GOT 45/67/44-ZL lifting door/side opening door	SET211436		**3199,50**

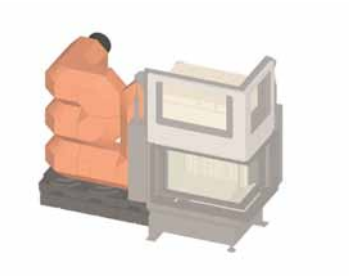

MSS heat storage set standing next at corner left side 390 kg

Set consists of:	Art.-Nr.	No.	Price
Accumulation stone MSS connecting block / GOF side	G023204	1	
MSS elbow 90° with lining, double-layered	R013061	1	
MSS elbow 90° with cleanout top	R013019	3	
MSS outlet block ø 180 with sealing	R013067	1	
MSS heat storage module 10 cm	R013002	2	
MSS elbow 90°	R013005	4	
MSS steel tape ring, packaging steel tape 16 x 0,5	R013020	15	
MSS glue Thermofix 1000 1 kg	900133	2	
MSS heat storage module 20 cm	R013001	2	
MSSI insulating block 30x30 cm	R013108	4	
MSS elbow 90° with opening top	R013007	1	
MSS bypass 30 with sealings	R013073	1	
MSS heat storage module 20 cm with opening	R013003	1	
MSS base plate 100 30x30 cm	R013124	4	
MSS handle with rotating part	R013170	1	

Available variants:

MSS heat storage set standing next suitable for:			
GOF 50x35 + GOT 45/67/44-ZL lifting door/side opening door	SET211502		**3199,50**

MSS heat storage set standing next in the corner right side 410 kg

Set consists of:	Art.-Nr.	No.	Price
Accumulation stone MSS connecting block / GOF side	G023205	1	
MSS elbow 90° with lining, double-layered	R013061	1	
MSS elbow 90° with cleanout top	R013019	3	
MSS outlet block ø 180 with sealing	R013067	1	
MSS heat storage module 10 cm	R013002	2	
MSS elbow 90°	R013005	2	
MSS steel tape ring, packaging steel tape 16 x 0,5	R013020	18	
MSS glue Thermofix 1000 1 kg	900133	2	
MSS heat storage module 20 cm	R013001	5	
MSSI insulating block 30x30 cm	R013108	3	
MSS elbow 90° with opening top	R013007	2	
MSS bypass 30 with sealings	R013073	1	
MSS base plate 75 30x30 cm	R013123	4	
MSS base plate 100 30x30 cm	R013124	4	
MSSI insulating block 20x30 cm	R013107	1	
MSS heat storage module with lining 10 cm, double-layered	R013066	1	
MSS handle with rotating part	R013170	1	

Available variants:

MSS heat storage set standing next suitable for:			
GOF 35x35 + GOT 51/52/52-ZL side-opening door	SET211425		**3627,00**

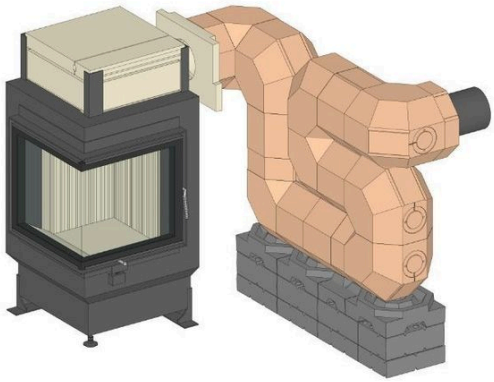

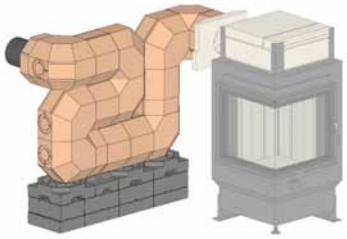

MSS heat storage set standing next in the corner left side 410 kg

Set consists of:	Art.-Nr.	No.	Price
Accumulation stone MSS connecting block / GOF side	G023204	1	
MSS elbow 90° with lining, double-layered	R013061	1	
MSS elbow 90° with cleanout top	R013019	3	
MSS outlet block ø 180 with sealing	R013067	1	
MSS heat storage module 10 cm	R013002	2	
MSS elbow 90°	R013005	2	
MSS steel tape ring, packaging steel tape 16 x 0,5	R013020	18	
MSS glue Thermofix 1000 1 kg	900133	2	
MSS heat storage module 20 cm	R013001	5	
MSSI insulating block 30x30 cm	R013108	3	
MSS elbow 90° with opening top	R013007	2	
MSS bypass 30 with sealings	R013073	1	
MSS base plate 75 30x30 cm	R013123	4	
MSS base plate 100 30x30 cm	R013124	4	
MSSI insulating block 20x30 cm	R013107	1	
MSS heat storage module with lining 10 cm, double-layered	R013066	1	
MSS handle with rotating part	R013170	1	

Available variants:

MSS heat storage set standing next suitable for:			
GOF 35x35 + GOT 51/52/52-ZL side-opening door	SET211437		**3627,00**

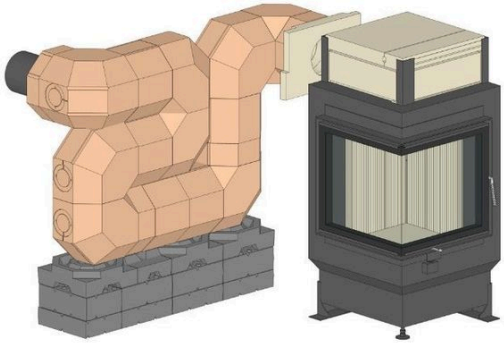

MSS heat storage set standing next in the corner right side 410 kg

Set consists of:	Art.-Nr.	No.	Price
Accumulation stone MSS connecting block / GOF side	G023205	1	
MSS elbow 90° with lining, double-layered	R013061	1	
MSS elbow 90° with cleanout top	R013019	3	
MSS outlet block ø 180 with sealing	R013067	1	
MSS heat storage module 10 cm	R013002	2	
MSS elbow 90°	R013005	2	
MSS steel tape ring, packaging steel tape 16 x 0,5	R013020	18	
MSS glue Thermofix 1000 1 kg	900133	2	
MSS heat storage module 20 cm	R013001	5	
MSSI insulating block 30x30 cm	R013108	3	
MSS elbow 90° with opening top	R013007	2	
MSS bypass 30 with sealings	R013073	1	
MSS base plate 100 30x30 cm	R013124	4	
MSSI insulating block 20x30 cm	R013107	1	
MSS heat storage module with lining 10 cm, double-layered	R013066	1	
MSS handle with rotating part	R013170	1	

Available variants:

MSS heat storage set standing next suitable for:			
GOF 50x35 + GOT 45/67/44-ZL lifting door/side opening door	SET211440		**3437,00**

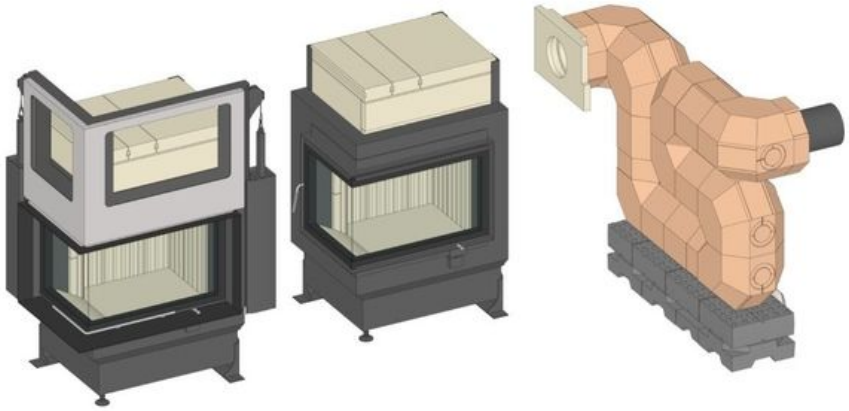

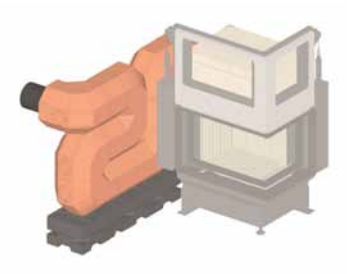

MSS heat storage set standing next in the corner left side 410 kg

Set consists of:	Art.-Nr.	No.	Price
Accumulation stone MSS connecting block / GOF side	G023204	1	
MSS elbow 90° with lining, double-layered	R013061	1	
MSS elbow 90° with cleanout top	R013019	3	
MSS outlet block ø 180 with sealing	R013067	1	
MSS heat storage module 10 cm	R013002	2	
MSS elbow 90°	R013005	2	
MSS steel tape ring, packaging steel tape 16 x 0,5	R013020	18	
MSS glue Thermofix 1000 1 kg	900133	2	
MSS heat storage module 20 cm	R013001	5	
MSSI insulating block 30x30 cm	R013108	3	
MSS elbow 90° with opening top	R013007	2	
MSS bypass 30 with sealings	R013073	1	
MSS base plate 100 30x30 cm	R013124	4	
MSSI insulating block 20x30 cm	R013107	1	
MSS heat storage module with lining 10 cm, double-layered	R013066	1	
MSS handle with rotating part	R013170	1	

Available variants:

MSS heat storage set standing next suitable for:			
GOF 50x35 + GOT 45/67/44-ZL lifting door/side opening door	SET211505		**3437,00**

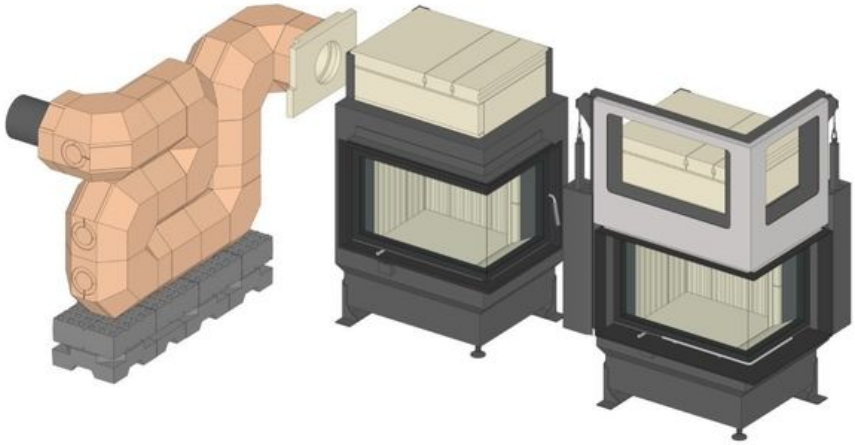

Tunnel

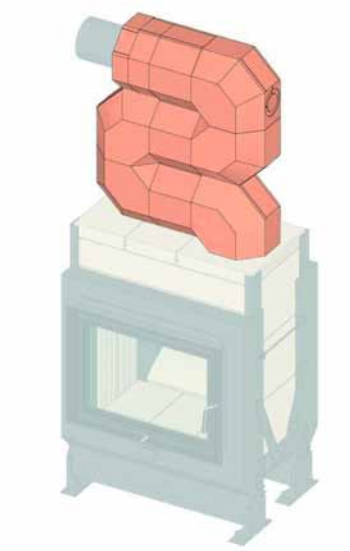

MSS heat storage set standing on top 255 kg

Set consists of:	Art.-Nr.	No.	Price
Accumulation stone MSS connecting block / GOF top cover	G017110	1	
MSS elbow 90° with lining, double-layered	R013061	1	
MSS elbow 90° with cleanout top	R013019	2	
MSS outlet block ø 180 with sealing	R013067	1	
MSS heat storage module 10 cm	R013002	1	
MSS elbow 90°	R013005	2	
MSS steel tape ring, packaging steel tape 16 x 0,5	R013020	10	
MSS glue Thermofix 1000 1 kg	900133	2	
MSS heat storage module 20 cm	R013001	3	
MSS handle with rotating part	R013170	1	

Available variants:

MSS heat storage set standing on top suitable for:			
GOF Tunnel 66x36 + GOT 51/67-ZL 2 side-opening doors	SET211414		**1905,50**

With the MSS set a flue outlet can be realized either to the left or right side.

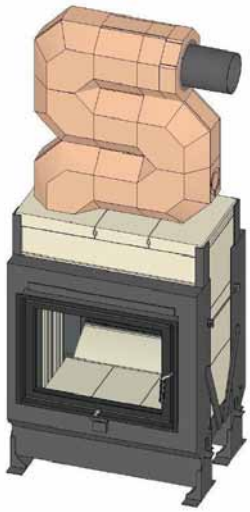

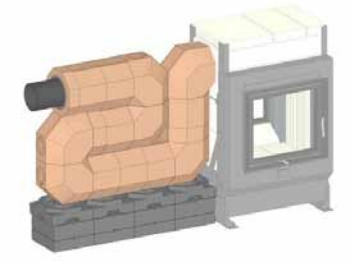

MSS heat storage set standing next 380 kg

Set consists of:	Art.-Nr.	No.	Price
Accumulation stone MSS connecting block / GOF side	G015108	1	
MSS elbow 90° with lining, double-layered	R013061	1	
MSS elbow 90° with cleanout top	R013019	3	
MSS outlet block ø 180 with sealing	R013067	1	
MSS heat storage module 10 cm	R013002	2	
MSS elbow 90°	R013005	1	
MSS steel tape ring, packaging steel tape 16 x 0,5	R013020	16	
MSS glue Thermofix 1000 1 kg	900133	2	
MSS heat storage module 20 cm	R013001	6	
MSSI insulating block 30x30 cm	R013108	4	
MSS elbow 90° with opening top	R013007	1	
MSS bypass 30 with sealings	R013073	1	
MSS base plate 75 30x30 cm	R013123	4	
MSS base plate 100 30x30 cm	R013124	4	
MSS heat storage module 20 cm with opening	R013003	1	
MSS handle with rotating part	R013170	1	

Available variants:

MSS heat storage set standing next suitable for:			
GOF Tunnel 66x36 + GOT 51/67-ZL 2 side-opening doors	SET211419		**3383,50**

The MSS accumulation block can be mounted either to the left or right side of the GOF

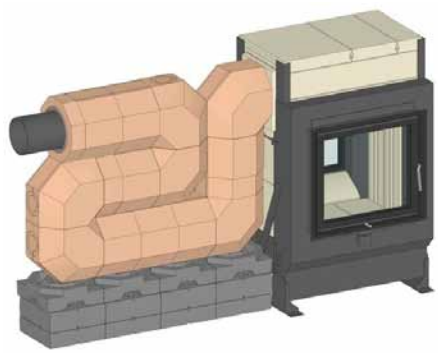

GNF Cast iron radiator

GNF 8

Set consists of:	Art.-Nr.	No.	Price
GNF 8 without connecting pieces		1	
Connecting piece, inlet⌀ 180		1	
Connecting piece, outlet⌀ 160		1	

Additional options			
Connecting piece, inlet⌀ 200	07140		84,00
Connecting piece, inlet⌀ 160	07136		84,00
Connecting piece, outlet⌀ 180	07139		84,00
Connecting piece, inlet⌀ 145	R014017		84,00
Connecting piece, outlet⌀ 145	R014013		84,00
Support bearing GNF 8	N002099		231,50
Heat protective screen for GNF in connection with DF 33	R014032		223,50

Available variants:

GNF 8	SET212336		**1292,00**

GNF 10

Set consists of:	Art.-Nr.	No.	Price
GNF 10 without connecting pieces		1	
Connecting piece, inlet ⌀ 180		1	
Connecting piece, outlet ⌀ 160		1	

Additional options			
Connecting piece, inlet ⌀ 200	07140		84,00
Connecting piece, inlet ⌀ 160	07136		84,00
Connecting piece, outlet ⌀ 180	07139		84,00
Connecting piece, outlet ⌀ 145	R014013		84,00
Support bearing GNF 10	10828		252,50

Available variants:

GNF 10	SET211449		**1793,50**

Fireplace construction plates and mortars

Fireplace construction plates (single)

	Art.-Nr.	Price
Fireplace construction plate 250 x 1000 x 35	N007002	58,50
Fireplace construction plate 500 x 1000 x 35	N007003	116,50
Fireplace construction plate 500 x 750 x 35	N007004	87,50
Fireplace construction plate corner 250 x 250 x 125 x 35	N007005	56,50
Fireplace construction plate corner 500 x 250 x 125 x 35	N007006	93,50
Construction plate support profile 500 x 142 x 73 x 35	N007008	34,00

Fireplace construction plates (pallet)

	pallet/pcs.	Art.-Nr.	Price
Fireplace construction plate 250 x 1000 x 35	34	N007002-P	1885,50
Fireplace construction plate 500 x 1000 x 35	17	N007003-P	1885,50
Fireplace construction plate 500 x 750 x 35	26	N007004-P	2196,00
Fireplace construction plate corner 250 x 250 x 125 x 35	42	N007005-P	2278,00
Fireplace construction plate corner 500 x 250 x 125 x 35	42	N007006-P	3718,50
Construction plate support profile 500 x 142 x 73 x 35	17	N007008-P	514,00

Socle frame

	Art.-Nr.	Price
Corner connector for socle frame	D028220	110,00
Socle frame length element L = 1200 mm	D028215	386,50
Socle frame lenght element L = 1795 mm	D028229	552,50

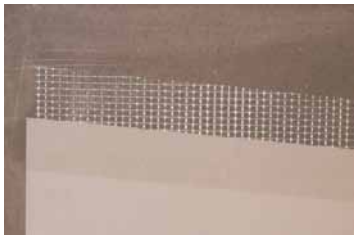

Adhesive and plastering mortars Spezial 1100

	Art.-Nr.	Price
Adhesive and plastering mortars Spezial 1100 white 20 kg sack	900284	110,00
Adhesive and plastering mortars Spezial 1100 white 20 kg sack pallet = 48 sacks	900284P	4768,50
Glass fibre mesh (reinforcing mesh) 6x6	20079	238,50
Bucket with handle and lid for adhesive and plastering mortars Spezial 1100	900279	11,00

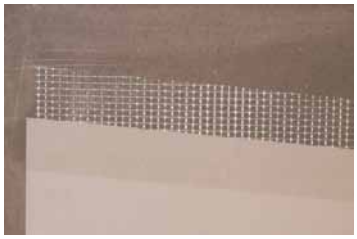

Adhesive and plastering mortars Universal 600

	Art.-Nr.	Price
Adhesive and plastering mortars Universal 600 pure white 20 kg sack	900384	85,50
Adhesive and plastering mortars Universal 600 pure white 20 kg sack pallet = 48 sacks	900384P	3676,00
Glass fibre mesh (reinforcing mesh) 6x6	20079	238,50
Bucket with handle and lid for adhesive and plastering mortars Universal 600	900386	11,00

Plaster Coat

	Art.-Nr.	Price
Plaster Coat 10 kg sack	902285	48,50
Plaster Coat 10 kg sack Pallet = 80 sacks	902285P	3680,00
Bucket with handle and lid for Plaster Coat	900387	11,00

Combustion chamber mortar

	Art.-Nr.	Price
Combustion chamber mortar FM1300 beige 10 kg bucket	900129	60,00

Materials for surface refinement

	Art.-Nr.	Price
Carnauba wax emulsion concentrate 0,5 l bottle	900285	39,00
Revisional materials BSK/BSO/KSO consisting of: japanese putty, sandpaper, 400 g filler, 250 g top coat	900300	31,00

Accessories construction material

	Art.-Nr.	Price
Special masking tape 50 m	02576	14,00

HKD	flat	Eck	Tunnel

USA, EOS, EAS

USA 3

Article description	Art.-Nr.	Price
USA negative pressure safety device “USA-3”	E007068	1184,00
Accessories USA		
Smoke sensor connection for “USA”	E007063	285,50
Smoke sensor connection for "USA-2" in combination with MSS	E007058	87,50
Exhaust gas connection for "USA" in combination with ceramic storage	E007055-03	167,00
Mounting box	900001	19,00
Mounting box for dry wall installation	E004007-01	121,00
Negative pressure hose (by metre)	11602	16,00
Sensor wiring 2 lm	12120	37,50
Sensor wiring 3 lm	12121	51,00
Sensor wiring 4 lm	12122	60,00
Sensor wiring 5 lm	12123	69,00
Sensor wiring 7 lm	12125	90,50
Sensor wiring 10 lm	12124	127,00
Handmonitor for USA	900201	263,00

Article description	Art.-Nr.	Price
Collars for smoke pipes		
Concentric collar ⌀ 150 mm	E007043-1	199,50
Concentric collar ⌀ 130 mm	E007045-1	199,50
Concentric collar ⌀ 180 mm	E007092-01	217,00

USA 4

Article description	Art.-Nr.	Price
USA negative pressure safety device “USA-4”	E007125	1125,00
Accessories USA		
Smoke sensor connection for “USA”	E007063	285,50
Smoke sensor connection for "USA-2" in combination with MSS	E007058	87,50
Exhaust gas connection for "USA" in combination with ceramic storage	E007055-03	167,00
Mounting box	901101	14,00
Mounting box for dry wall installation	901104	53,00
Negative pressure hose (by metre)	11602	16,00
Sensor wiring 2 lm	12120	37,50
Sensor wiring 3 lm	12121	51,00
Sensor wiring 4 lm	12122	60,00
Sensor wiring 5 lm	12123	69,00
Sensor wiring 7 lm	12125	90,50
Sensor wiring 10 lm	12124	127,00

Article description	Art.-Nr.	Price
Collars for smoke pipes		
Concentric collar ⌀ 150 mm	E007043-1	199,50
Concentric collar ⌀ 130 mm	E007045-1	199,50
Concentric collar ⌀ 180 mm	E007092-01	217,00

USA, EOS, EAS

USA 4 Funk

Article description	Art.-Nr.	Price
USA negative pressure safety device USA-4 Funk with 1 x radio receiver	E007109	1727,00
Accessories USA 4 Funk		
Smoke sensor connection for “USA”	E007063	285,50
Smoke sensor connection for "USA-2" in combination with MSS	E007058	87,50
Exhaust gas connection for "USA" in combination with ceramic storage	E007055-03	167,00
Mounting box	901101	14,00
Mounting box for dry wall installation	901104	53,00
Negative pressure hose (by metre)	11602	16,00
Sensor wiring 2 lm	12120	37,50
Sensor wiring 3 lm	12121	51,00
Sensor wiring 4 lm	12122	60,00
Sensor wiring 5 lm	12123	69,00
Sensor wiring 7 lm	12125	90,50
Sensor wiring 10 lm	12124	127,00

Article description	Art.-Nr.	Price
Special accessory		
radio receiver, max. amount/USA: 3 radio receiver	E007065	464,50
Radio Repeater for USA 4 , signal amplifier	E007096	741,50

Article description	Art.-Nr.	Price
Collars for smoke pipes		
Concentric collar ⌀ 150 mm	E007043-1	199,50
Concentric collar ⌀ 130 mm	E007045-1	199,50
Concentric collar ⌀ 180 mm	E007092-01	217,00

EOS 8

Article description		Art.-Nr.	Price
EOS 8 display- and control unit white	■	E004071	2342,00
EOS 8 display - and control unit black		E004073	2342,00
Mounting box			
Mounting box EOS/EAS/USA	■	900001	19,00
Mounting box for dry wall installation EOS/EAS/USA		E004007-01	121,00
Wall- mount box controll unit	■	902261	53,00
Connection door switch wiring EOS			
Door switch wiring EAS/EOS sensor wiring USA - 2 lm	■	12120	37,50
Door switch wiring EAS/EOS Fühlerleitung USA - 3 lm		12121	51,00
Door switch wiring EAS/EOS sensor wiring USA - 4 lm		12122	60,00
Door switch wiring EAS/EOS sensor wiring USA - 5 lm		12123	69,00
Door switch wiring EAS/EOS sensor wiring USA - 7 lm		12125	90,50
Door switch wiring EAS/EOS sensor wiring USA - 10 lm		12124	127,00
Connection thermocouple EOS			
Thermocouple wiring-T1/T3 2 lm	■	10958	41,50
Thermocouple wiring-T1/T3 3 lm		10959	54,50
Thermocouple wiring-T1/T3 4 lm		10960	66,00
Thermocouple wiring-T1/T3 5 lm		10961	81,00
Thermocouple wiring-T1/T3 7 lm		10963	103,00
Thermocouple wiring-T1/T3 10 lm		10962	143,50
Connection K1 to EOS			
Bus wiring-K1 2 lm	■	12150	58,00
Bus wiring-K1 3 lm		12151	69,00
Bus wiring-K1 4 lm		12152	79,00
Bus wiring-K1 5 lm		12153	90,00
Bus wiring-K1 7 lm		12154	104,50
Bus wiring-K1 10 lm		12155	135,00
motorized damper flap			
motorized damper flap D=180 mm	■	SET210596	1001,00
motorized damper flap D=200 mm		SET210597	1018,50
motorized damper flap D=250 mm		SET210598	1034,00
Connection wiring K1-K2			
Connection wiring K1-K2 2 lm	■	E013009-2	52,00
Connection wiring K1-K2 3 lm		E013009-3	59,50
Connection wiring K1-K2 4 lm		E013009-4	66,50
Connection wiring K1-K2 5 lm		E013009-5	75,50
Connection wiring K1-K2 7 lm		E013009-7	91,50
Connection wiring K1-K2 10 lm		E013009-10	111,00

USA, EOS, EAS

Article description		Art.-Nr.	Price
Extended functionality sensors			
Thermocouple long with ceramic sleeve M12 and complete screw fitting (T1 and T3)	☐	10994.1	223,50
Temperature sensor with immersion sleeve for water to smoke valve actuator (T2,T4,T6,T7)		10339	54,50
Connection display to control unit EOS			
Connection wiring EOS display-control unit - 2 lm	☐	E013001-2	34,00
Connection wiring EOS display-control unit - 3 lm		E013001-3	37,00
Connection wiring EOS display-control unit - 4 lm		E013001-4	41,50
Connection wiring EOS display-control unit - 5 lm		E013001-5	45,00
Connection wiring EOS display-control unit - 7 lm		E013001-7	54,50
Connection wiring EOS display-control unit - 10 lm		E013001-10	65,50
Connection control unit to T2/T4 (screened cable)			
Extension wiring EWM/T2,T4,T6,T7 - 3 lm	☐	E013013-01	51,00
Extension wiring EWM/T2,T4,T6,T7 - 5 lm		E013013-02	58,00
Extension wiring EWM/T2,T4,T6,T7 - 10 lm		E013013-03	84,00
Extension wiring EWM/T2,T4,T6,T7 - 15 lm		E013013-04	104,50
Connection EOS with BHZ			
Connection wiring EOS control unit BHZ and EWP - 0,7 lm	☐	E013005-1	26,00
Connection wiring EOS control unit BHZ and EWP - 2 lm		E013005-2	30,50
Connection wiring EOS control unit BHZ and EWP - 3 lm		E013005-3	34,00
Connection wiring EOS control unit BHZ and EWP - 4 lm		E013005-4	37,00
Connection wiring EOS control unit BHZ and EWP - 5 lm		E013005-5	42,00
Connection wiring EOS control unit BHZ and EWP - 7 lm		E013005-7	48,50
Connection wiring EOS control unit BHZ and EWP - 10 lm		E013005-10	62,50
Flap actuator			
smoke valve actuator L/R - rotating with drive box	☐	10338	916,50
Accessories flap actuator			
flexible Shaft 490 mm	☐	10340	114,50
flexible Shaft 1200 mm		S004029	330,50
Control shaft d=8mm, length 360 mm for flue gas T-pipe		00669	99,50
Coupling 12/12 for elongation piece for square bar with flexible shaft		10273	18,00
Insulation for drive box / flap actuator “M2”		10329	124,00

Article description	Art.-Nr.	Price
Brunner Smart Home		
BSH Module Precondition: EOS 8	E004076	697,50

Extension board zur EOS

from page 326

EAS

Article description		Art.-Nr.	Price
EAS 3 control unit with display	■	E005017	876,00
EAS 3 control unit without Display		E005018	661,00
Mounting box			
Mounting box EOS/EAS/USA	■	900001	19,00
Mounting box for dry wall installation EOS/EAS/USA		E004007-01	121,00
Connection door switch wiring EAS			
Door switch wiring EAS/EOS sensor wiring USA - 2 lm	■	12120	37,50
Door switch wiring EAS/EOS sensor wiring USA - 3 lm		12121	51,00
Door switch wiring EAS/EOS sensor wiring USA - 4 lm		12122	60,00
Door switch wiring EAS/EOS sensor wiring USA - 5 lm		12123	69,00
Door switch wiring EAS/EOS sensor wiring USA - 7 lm		12125	90,50
Door switch wiring EAS/EOS sensor wiring USA - 10 lm		12124	127,00
Connection thermocouple EAS			
Thermocouple wiring-T1/T3 2 lm	■	10958	41,50
Thermocouple wiring-T1/T3 3 lm		10959	54,50
Thermocouple wiring-T1/T3 4 lm		10960	66,00
Thermocouple wiring-T1/T3 5 lm		10961	81,00
Thermocouple wiring-T1/T3 7 lm		10963	103,00
Thermocouple wiring-T1/T3 10 lm		10962	143,50
Connection K1 to EAS			
Bus wiring-K1 2 lm	■	12150	58,00
Bus wiring-K1 3 lm		12151	69,00
Bus wiring-K1 4 lm		12152	79,00
Bus wiring-K1 5 lm		12153	90,00
Bus wiring-K1 7 lm		12154	104,50
Bus wiring-K1 10 lm		12155	135,00
motorized damper flap			
motorized damper flap D=180 mm	■	SET210596	1001,00
motorized damper flap D=200 mm		SET210597	1018,50
motorized damper flap D=250 mm		SET210598	1034,00
Connection wiring K1-K2			
Connection wiring K1-K2 2 lm	■	E013009-2	52,00
Connection wiring K1-K2 3 lm		E013009-3	59,50
Connection wiring K1-K2 4 lm		E013009-4	66,50
Connection wiring K1-K2 5 lm		E013009-5	75,50
Connection wiring K1-K2 7 lm		E013009-7	91,50
Connection wiring K1-K2 10 lm		E013009-10	111,00

Contact.

Phone +49 8721 771-0

Export Sales + 49 8721 771- 250

export@brunner.de

Katharina Punzmann
Order processing - export

punzmann@brunner.de
Direct dialing ...-241

Ilona Witte
Order processing - export

ilona.witte@brunner.eu
Direct dialing ...-128

Service support + 49 8721 771-638

Markus Soutschek

soutschek@brunner.de

Ulrich Brunner GmbH
Zellhuber Ring 17 - 18
D-84307 Eggenfelden
www.brunner.de

BRUNNER products are offered and sold only by qualified dealers and service centres.

Stand 05/2024 Subject to technical and assortment changes. Errors excepted.

Subject to our “General terms and conditions of business”.www.brunner.de/AGB

BRUNNER®